STATE	PROJECT DESIGNATION	YEAR	SHEET NO.	TOTAL SHEETS
ALASKA	0A31056/CFHWY00011	2019	N1	N29

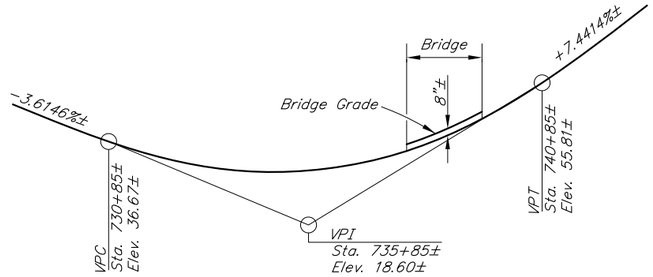

BRIDGE PROFILE GRADE DATA

No Scale

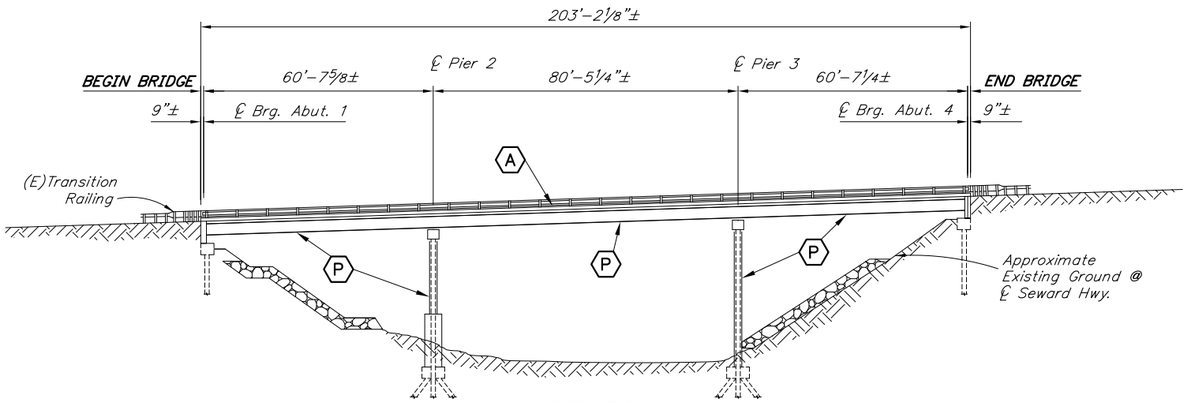

ELEVATION

10 0 20 40
Feet

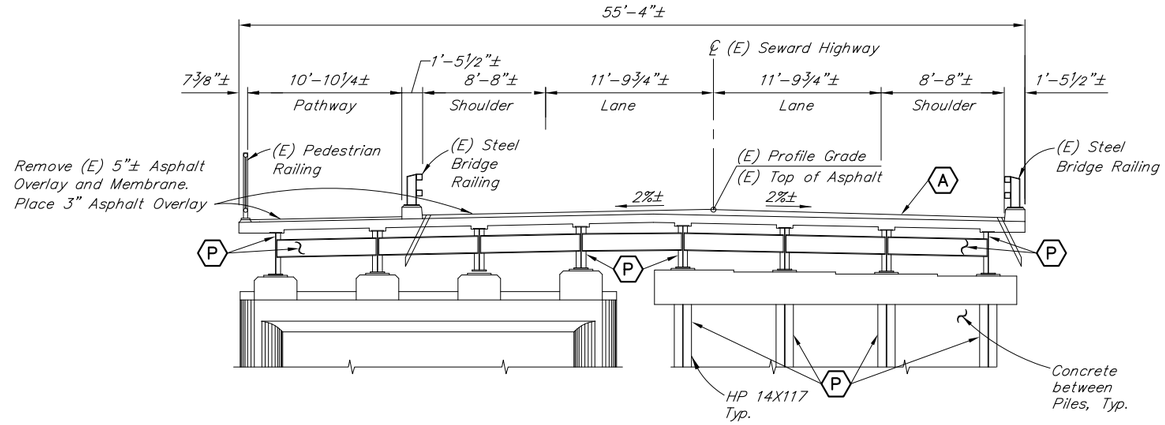

TYPICAL SECTION

12 6 0 1 2 3
In. Feet

BRIDGE BASIS OF ESTIMATE

ITEM NO.	ITEM	PAY UNIT	ESTIMATING UNIT	SUBST.	SUPERST.	TOTAL
513.0001.0000	Field Painting of Steel Structures	LS	SF	701	17,605	18,306

Item numbers are for reference only. Quantities shown are not necessarily the pay quantities nor the total quantity of the particular item.

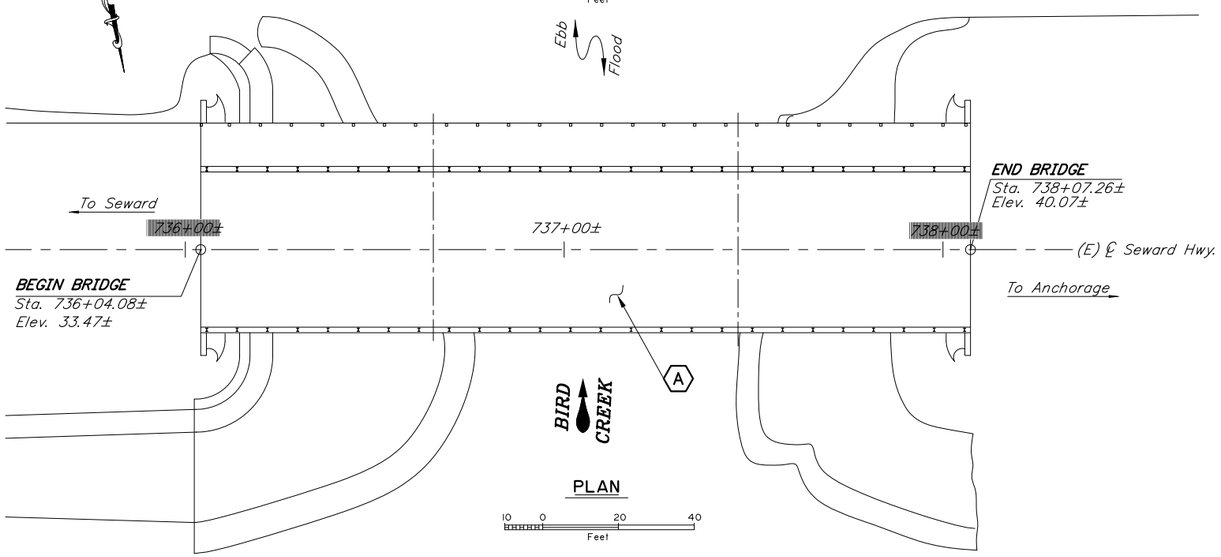

PLAN

10 0 20 40
Feet

BRIDGE DRAWING INDEX

TITLE	DWG. NO.
GENERAL LAYOUT	1
FRAMING PLAN & TYPICAL SECTIONS	2
PIERS	3

LEGEND

(A) = Remove (E) 5"± Asphalt Overlay and Membrane. Place 3" Asphalt Overlay

(P) = Remove and Replace Paint

ABBREVIATIONS:

℄	= centerline	LS	= lump sum
ℙ	= plate	Lt.	= left
&	= and	max.	= maximum
@	= at	min.	= minimum.
ø	= diameter	N/A	= not applicable
±	= approximate	n.a.	= near face
Abut.	= abutment	No.	= number
Approx.	= approximate	o.c.	= on center
b.	= bottom	R/W	= right of way
Br.	= bridge	Rt.	= right
btwn.	= between	Rd.	= road
Brg.	= Bearings	SIP	= Stay in Place
Clr.	= clear, clearance	spcs.	= space, spaces
Dwg.	= drawing	Sta.	= station
(E)	= existing	Std.	= standard
EA	= each	SF	= square feet
Elev.	= elevation	Symm.	= symmetric
Ext.	= exterior	Typ.	= typical
Hwy.	= highway	VPC	= point of vertical curve
Jt.	= joint	VPI	= point of vertical intersection
LB	= pound	VPT	= point of vertical tangent
LF	= linear foot		

NOTES:

(E) = Existing

Elevations, Bearings, Stations, and dimensions are based on "1982 AS-BUILT" plans. Verify all controlling field dimensions before ordering or fabricating any material.

REHABILITATION

DESIGNED BY: Nick Murray	CHECKED: Hannah Bailey	LAYOUT BY: Nick Murray	CHECKED BY: Hannah Bailey
DRAWN BY: Sam Sollie	CHECKED: Nick Murray	SPECIFICATIONS BY: Nick Murray	P S & E COMPARED: Hannah Bailey
QUANTITIES BY: Nick Murray	CHECKED: Hannah Bailey	APPROVAL RECOMMENDED BY: Rich Pratt	

STATE OF ALASKA
DEPARTMENT OF TRANSPORTATION AND PUBLIC FACILITIES
BRIDGE SECTION
3132 Channel Drive
Juneau, Alaska 99801
907-465-2975

BIRD CREEK

SEWARD HIGHWAY

GENERAL LAYOUT

BRIDGE NO. 643

DWG. NO. 1

STATE	PROJECT DESIGNATION	YEAR	SHEET NO.	TOTAL SHEETS
ALASKA	0A31056/CFHWY00011	2019	N2	N29

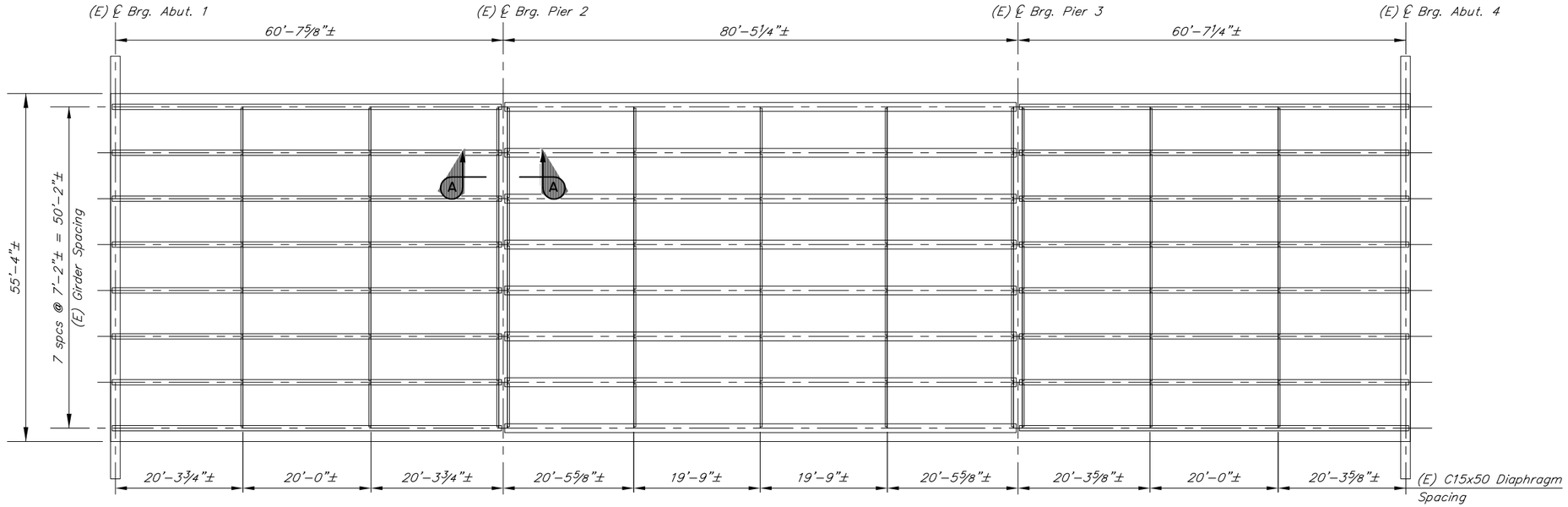

FRAMING PLAN

10 5 0 10 20
Feet

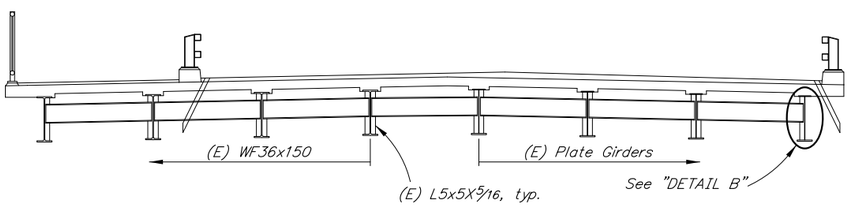

SPANS 1 & 3 TYPICAL SECTION

5 0 5 10
Feet

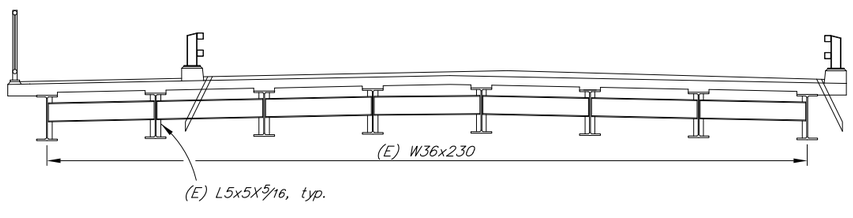

SPAN 2 TYPICAL SECTION

5 0 5 10
Feet

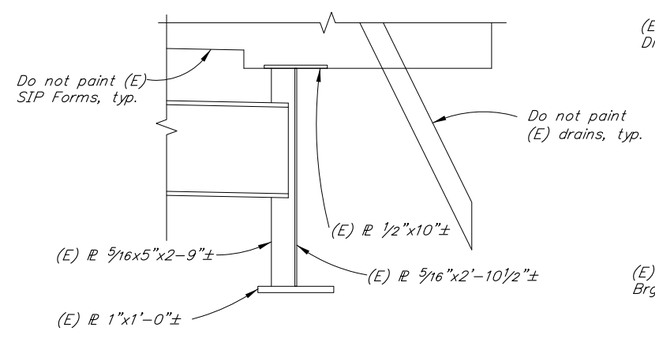

DETAIL B

12 6 0 1 2
In. Feet

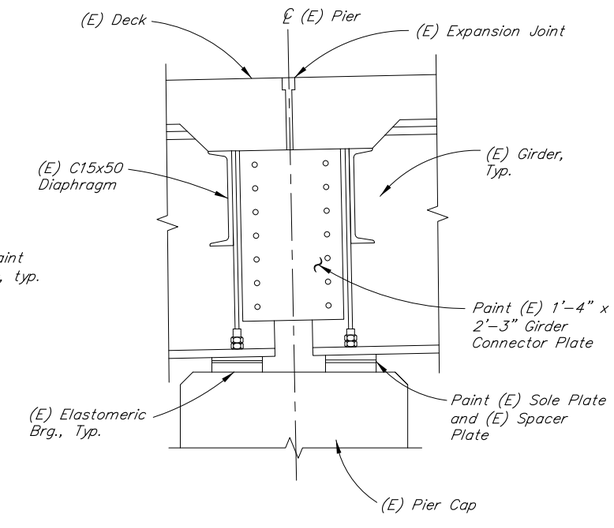

SECTION A-A

12 6 0 1 2
In. Feet

NOTES:

(E) = Existing

DESIGNED BY: Nick Murray	CHECKED: Hannah Bailey	REHABILITATION	STATE OF ALASKA DEPARTMENT OF TRANSPORTATION AND PUBLIC FACILITIES BRIDGE SECTION 3132 Channel Drive Juneau, Alaska 99801 907-465-2975	BIRD CREEK BRIDGE SEWARD HIGHWAY FRAMING PLAN & TYPICAL SECTIONS
DRAWN BY: Sam Sollie	CHECKED: Nick Murray			BRIDGE NO. 643
QUANTITIES BY: Nick Murray	CHECKED: Hannah Bailey			DWG. NO. 2

STATE	PROJECT DESIGNATION	YEAR	SHEET NO.	TOTAL SHEETS
ALASKA	0A31056/CFHWY00011	2019	N3	N29

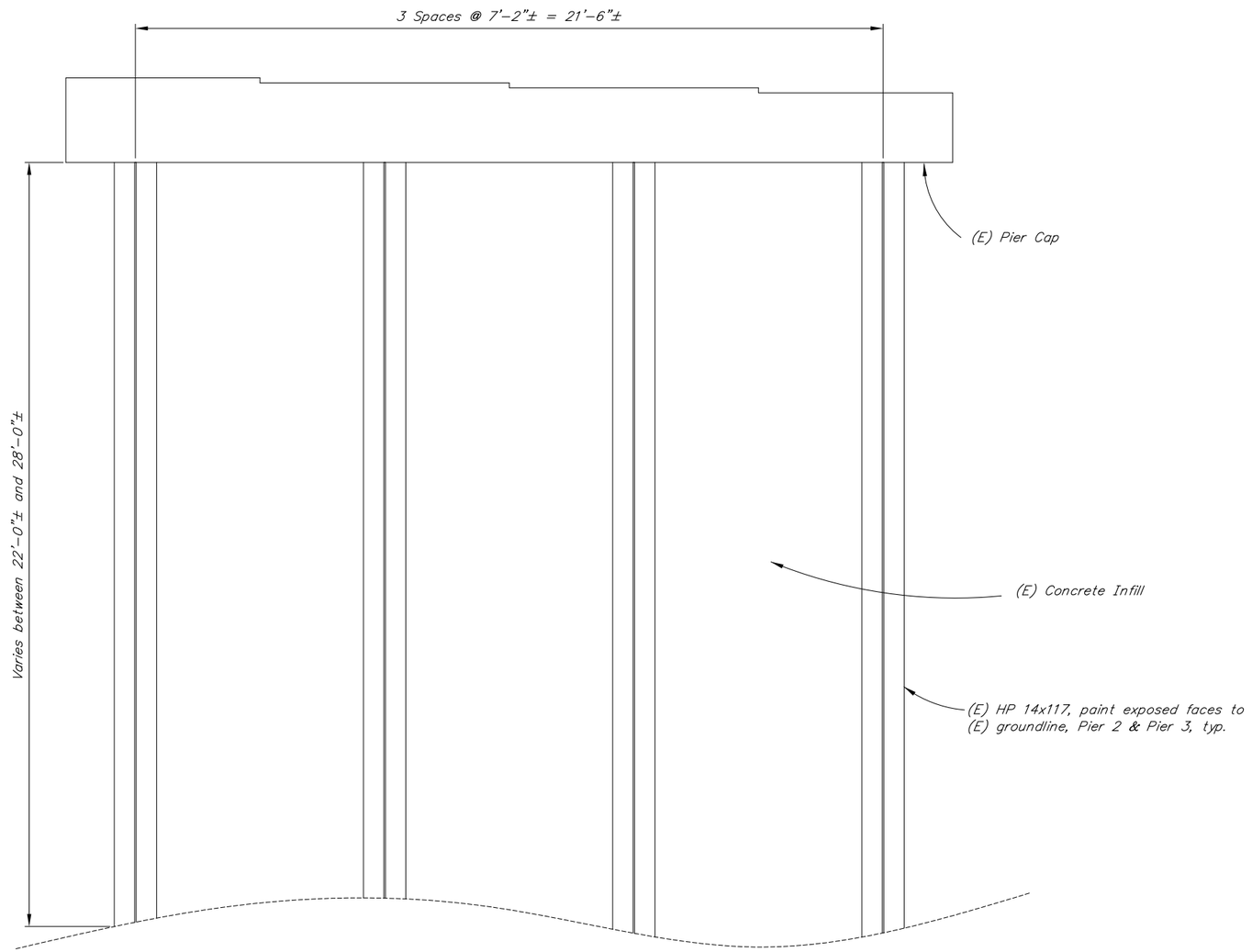

PIER 2 & 3 ELEVATION

DESIGNED BY: Nick Murray	CHECKED: Hannah Bailey	**REHABILITATION**	STATE OF ALASKA **DEPARTMENT OF TRANSPORTATION AND PUBLIC FACILITIES** BRIDGE SECTION 3132 Channel Drive Juneau, Alaska 99801 907-465-2975	**BIRD CREEK BRIDGE** SEWARD HIGHWAY **PIERS**
DRAWN BY: Sam Sollie	CHECKED: Nick Murray			BRIDGE NO. 643
QUANTITIES BY: Nick Murray	CHECKED: Hannah Bailey			DWG. NO. 3

STATE	PROJECT DESIGNATION	YEAR	SHEET NO.	TOTAL SHEETS
ALASKA	0A31056/CFHWY00011	2019	N4	N29

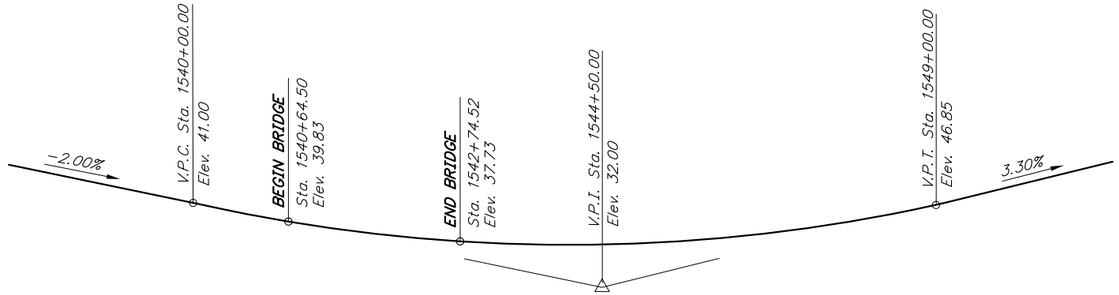

PROFILE GRADE DATA

No Scale

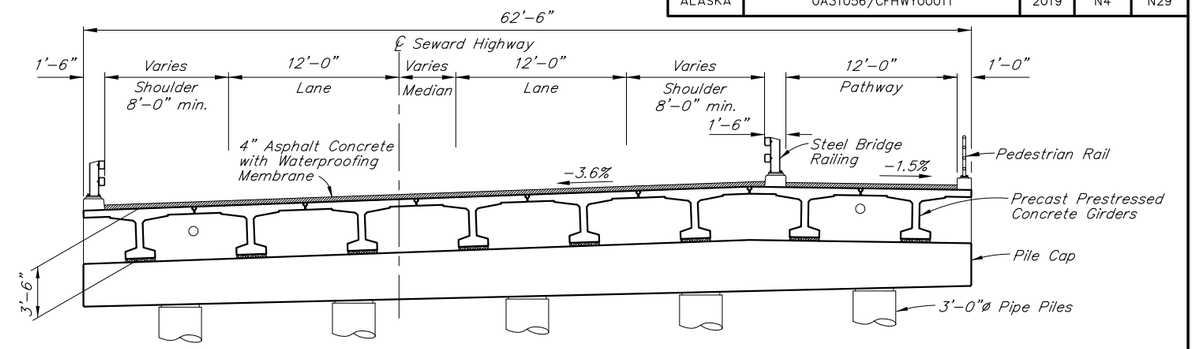

TYPICAL SECTION

12 0 5 10
In. Feet

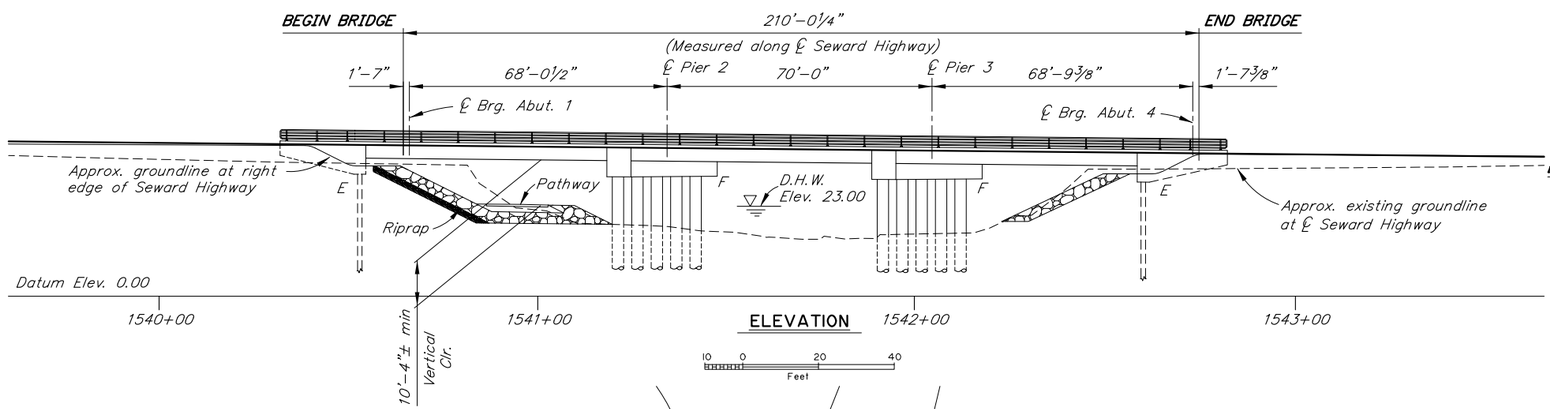

ELEVATION

10 0 20 40
Feet

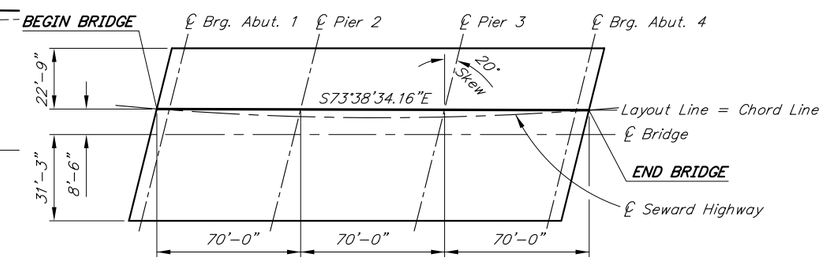

LAYOUT LINE

No Scale

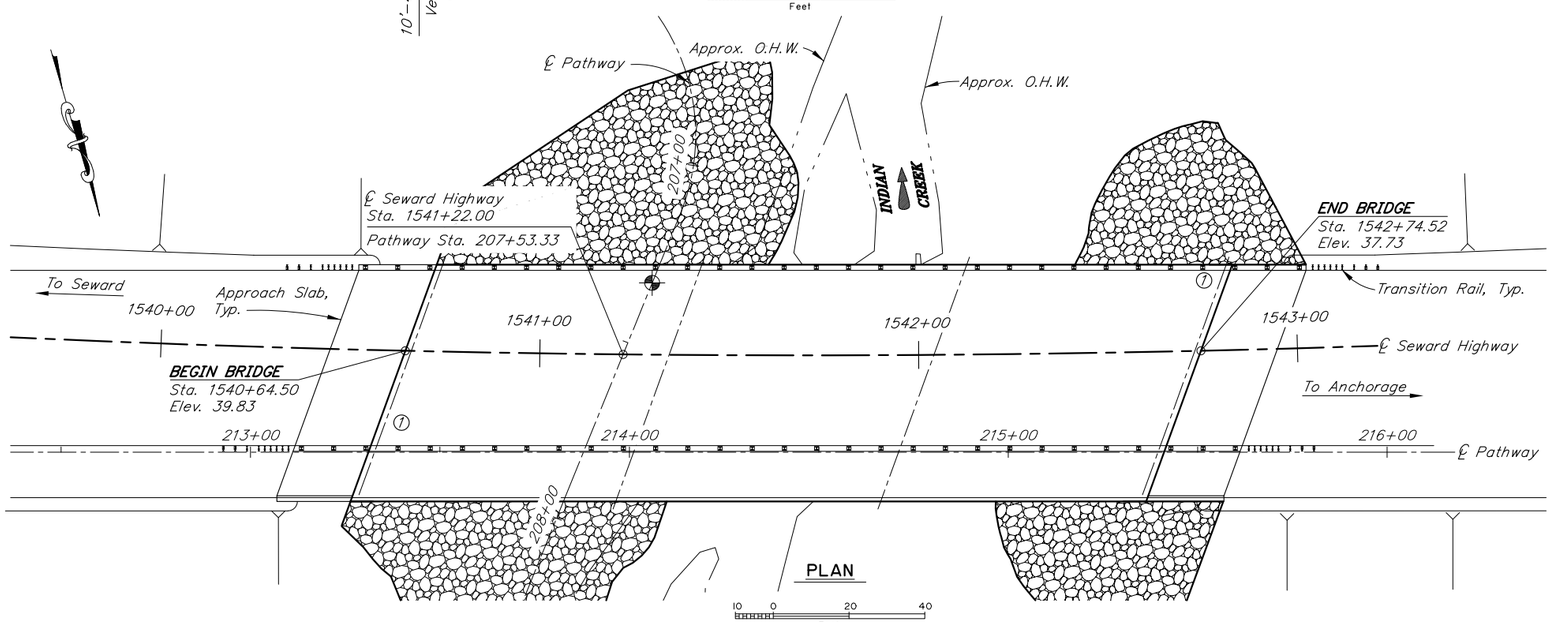

PLAN

10 0 20 40
Feet

HORIZONTAL CURVE DATA

PI STA. 1536+59.31
Northing = 255820.87
Easting = 417366.92
Δ = 29°31'44"
R = 4583.66'
T = 1208.02
L = 2362.32
S = 3.6%

DRAWING INDEX

TITLE	DWG. NO.
GENERAL LAYOUT	1
SITE PLAN	2
RIPRAP LAYOUT	3
RIPRAP DETAILS	4
ABUTMENT 1	5
ABUTMENT 4	6
ABUTMENT DETAILS	7
WINGWALLS	8
PIERS	9
PIER DETAILS	10
FRAMING PLAN AND TYPICAL SECTION	11
GIRDERS	12
GIRDER DETAILS	13
APPROACH SLABS	14
PEDESTRIAN RAILING	15
STEEL BRIDGE RAILING	16
THRIE BEAM TRANSITION RAIL	17
LOG OF TEST HOLE BORINGS	18-26

(1) Approximate location of Bridge Number Plate.

⊕ = Low point minimum vertical clearance.

DESIGNED BY: Elmer Marx	CHECKED: David McAdoo	LAYOUT BY: Elmer Marx	CHECKED BY: David McAdoo	STATE OF ALASKA **DEPARTMENT OF TRANSPORTATION AND PUBLIC FACILITIES** BRIDGE SECTION 3132 Channel Drive Juneau, Alaska 99801 907-465-2975		**INDIAN CREEK BRIDGE** SEWARD HIGHWAY **GENERAL LAYOUT**	BRIDGE NO. 644 DWG. NO. 1
DRAWN BY: Sam Sollie	CHECKED: Elmer Marx	SPECIFICATIONS BY: Elmer Marx	P S & E COMPARED: David McAdoo				
QUANTITIES BY: Elmer Marx	CHECKED: David McAdoo	APPROVAL RECOMMENDED BY: Rich Pratt					

R:\cad\644\644-GEN Thu, Jan/31/19 07:23am

STATE	PROJECT DESIGNATION	YEAR	SHEET NO.	TOTAL SHEETS
ALASKA	0A31056/CFHWY00011	2019	N5	N29

SITE PLAN

10 0 20 40
Feet

GENERAL NOTES

DESIGN:..... AASHTO LRFD Bridge Design Specifications, 2017 Edition, with latest interim specifications.

Seismic design per AASHTO Guide Specifications for LRFD Seismic Bridge Design, 2011 with latest interim revisions.

LIVE LOAD:..... HL-93

DEAD LOAD:..... Includes 50 psf for all wearing surfaces.

SEISMIC PARAMETERS:..... PGA = 0.53
Ss = 1.19
S1 = 0.48
Site Class = C
Liquefaction Potential = Low
AASHTO 7% probability of exceedance in 75 years.

REINFORCEMENT:..... ASTM A706, Grade 60, Fy = 60,000 psi
ASTM A970 Headed bars, Class HA.
Space reinforcement evenly unless otherwise noted.

PRESTRESSED CONCRETE:..... See "GIRDERS" Dwg.

CONCRETE:..... Class A Concrete unless otherwise noted, f'c = 4000 psi

STRUCTURAL STEEL:..... ASTM A709, Grade 36T3, Fy = 36,000 psi
Galvanize structural steel in accordance with AASHTO M111 unless noted otherwise.

STRUCTURAL STEEL PILING:..... Pipe Piles – API 5L X52 PSL2, Fy = 52,000 psi. or
ASTM A709 Grade 50T3, Fy = 50,000 psi.
H-Piles – ASTM A709, GR50T3, Fy = 50,000 psi.
Pile Tip reinforcing is required.

PILE DATA TABLE

		DRIVING CRITERIA			DESIGN DATA		
LOCATION	PILE TYPE	MINIMUM PENETRATION (ft)	ESTIMATED PILE TIP ELEVATION (ft)	DRIVING RESISTANCE (K)	STRENGTH I FACTORED LOAD (K)	NOMINAL RESISTANCE (K)	RESISTANCE FACTOR, Φ
Abutment 1	HP 14x117	30.0	-49.0	445	290	445	0.65
Pier 2	3'-0"øx3/4" Pipe	65.0	-66.0	1,050	650	1,000	0.65
Pier 3	3'-0"øx3/4" Pipe	65.0	-66.0	1,050	650	1,000	0.65
Abutment 4	HP 14x117	30.0	-54.0	445	290	445	0.65

Preboring may be required.

ESTIMATE OF QUANTITIES

ITEM NO.	ITEM	PAY UNIT	ESTIMATING UNIT	SUBST.	SUPERST.	TOTAL QUANTITY
202.0023.0000	Removal of Bridge, Existing Bridge Number 644	LS	LS	All Req'd	All Req'd	All Req'd
205.0006.0000	Structural Fill	CY	CY	1,555	---	1,555
301.0001.00D1	Aggregate Base Course, Grading D-1	TON	TON	353	---	353
501.0001.0000	Class A Concrete	LS	CY	324.4	247.6	572.0
501.0007.0000	Precast Concrete Member, 68'-4" Decked Bulb-Tee	EA	EA	---	24	24
503.0001.0000	Reinforcing Steel	LS	LBS	78,725	---	78,725
503.0002.0000	Epoxy-Coated Reinforcing Steel	LS	LBS	---	37,485	37,485
505.0005.1417	Furnish Structural Steel Piles, HP 14x117	LF	LF	1,170.8	---	1,170.8
505.0005.3675	Furnish Structural Steel Piles, 3'-0" Dia x 3/4" Pipe	LF	LF	970.8	---	970.8
505.0006.1417	Drive Structural Steel Piles, HP 14x117	EA	EA	14	---	14
505.0006.3675	Drive Structural Steel Piles, 3'-0" Dia x 3/4" Pipe	EA	EA	10	---	10
507.0001.0002	Steel Bridge Railing, 2-Tube	LF	LF	---	500.0	500.0
507.0002.0000	Pedestrian Railing	LF	LF	---	250.0	250.0
508.0001.0000	Waterproofing Membrane, Spray-Applied	LS	SF	---	14,625	14,625
520.0001.0000	Temporary Crossings	LS	LS	All Req'd	All Req'd	All Req'd
606.0016.0000	Transition Rail	EA	EA	---	4	4
610.0002.0000	Ditch Lining	TON	TON	539	---	539
611.0002.0002	Riprap, Class II	TON	TON	2,592	---	2,592

Item numbers are for reference only. Quantities shown are not necessarily the pay quantities nor the total quantity of the particular item.

ABBREVIATIONS:

℄ = centerline
PL = plate
& = and
@ = at
ø = diameter
± = approximate
AASHTO = American Association of State Highway and Transportation Officials
ASTM = American Society for Testing and Materials
Abut. = abutment
Approx. = approximate
b.f. = back/dirt face
bot. = bottom
Br. = bridge
btwn. = between
Brg. = bearings
C.I.P. = cast in place
C.G. = center of gravity
CJP = complete joint penetration
Clr. = clear, clearance
CY = cubic yard
dia. = diameter
Dwg. = drawing
E = expansion
(E) = existing
EA = each
Elev. = elevation
e.f. = each face
e.w. = each way
Ext. = exterior
F = fixed
f.f. = front/air face
f'c = specified concrete compressive strength
Fy = yield stress
Galv. = galvanize
—G— = gas line
Hwy. = highway
Int. = interior
Jt. = joint
ksf = 1000 pounds per square foot
ksi = 1000 pounds per square inch
LB = pound
LF = linear foot
LS = lump sum
Lt. = left
max. = maximum
min. = minimum
N/A = not applicable
n.f. = near face
No. = number
o.c. = on center
O.H.W. = ordinary high water
—OHE— = overhead electrical cable
pcf = pounds per cubic foot
psf = pounds per square foot
psi = pounds per square inch
R.O.W. = right of way
Rt. = right
Rd. = road
spc. = space, spaces
Sta. = station
Std. = standard
SF = square feet
Symm. = symmetric
Typ. = typical
UT = ultrasonic testing
V.P.C. = point of vertical curve
V.P.I. = point of vertical intersection
V.P.T. = point of vertical tangent
w/ = with

DESIGNED BY: Elmer Marx	CHECKED: David McAdoo	FOUNDATIONS REVIEWED BY: Dave Hemstreet	STATE OF ALASKA DEPARTMENT OF TRANSPORTATION AND PUBLIC FACILITIES BRIDGE SECTION 3132 Channel Drive Juneau, Alaska 99801 907-465-2975
DRAWN BY: Sam Sollie	CHECKED: Elmer Marx		
QUANTITIES BY: Elmer Marx	CHECKED: David McAdoo		

INDIAN CREEK BRIDGE

SEWARD HIGHWAY

SITE PLAN

BRIDGE NO. 644

DWG. NO. 2

R:\cad\644\644-SITE PLAN Thu, Jan/31/19 07:09am

STATE	PROJECT DESIGNATION	YEAR	SHEET NO.	TOTAL SHEETS
ALASKA	0A31056/CFHWY00011	2019	N6	N29

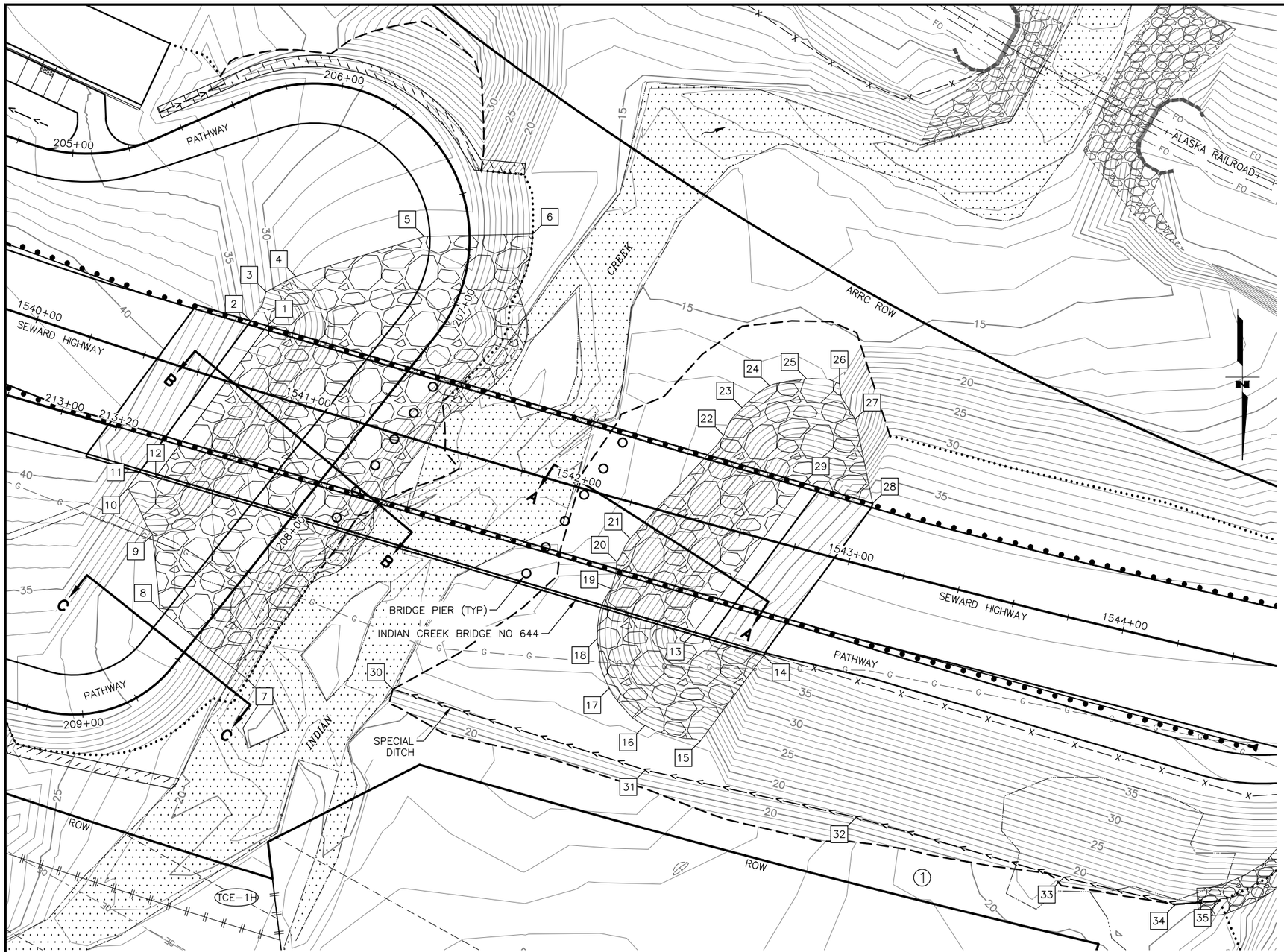

RIPRAP LAYOUT SCHEDULE

POINT	STATION	OFFSET	ELEVATION	REMARKS
1	1540+78.32	23.05 LT	33.55	
2	1540+72.30	22.93 LT	33.55	
3	1540+74.39	34.38 LT	31.00	
4	1540+82.80	42.77 LT	26.77	
5	1541+22.55	69.71 LT	26.33	
6	1541+59.75	81.66 LT	16.38	
7	1541+08.69	98.58 RT	17.57	
8	1540+72.55	84.33 RT	28.29	
9	1540+62.10	59.63 RT	28.52	
10	1540+48.96	46.73 RT	35.51	
11	1540+51.06	40.09 RT	35.37	
12	1540+57.01	39.94 RT	35.37	
13	1542+53.33	39.32 RT	33.08	
14	1542+79.46	39.88 RT	38.40	
15	1542+65.82	74.96 RT	18.12	
16	1542+45.78	74.79 RT	18.22	
17	1542+30.29	65.48 RT	18.91	
18	1542+21.60	49.62 RT	19.59	
19	1542+21.64	31.41 RT	19.88	
20	1542+20.91	21.65 RT	17.94	
21	1542+23.24	12.45 RT	17.53	
22	1542+45.37	31.58 LT	18.31	
23	1542+49.08	42.80 LT	17.59	
24	1542+56.52	52.86 LT	16.61	
25	1542+68.69	58.61 LT	16.37	
26	1542+80.44	60.05 LT	16.09	
27	1542+89.22	49.21 LT	21.20	
28	1543+02.90	22.02 LT	36.85	
29	1542+77.33	22.69 LT	31.55	
30	1541+58.00	87.00 RT	16.77	END SPECIAL DITCH
31	1542+50.00	90.00 RT	17.31	SPECIAL DITCH
32	1543+25.00	87.00 RT	17.75	SPECIAL DITCH
33	1544+00.00	90.00 RT	18.19	SPECIAL DITCH
34	1544+40.00	90.00 RT	19.62	SPECIAL DITCH
35	1544+54.52	85.51 RT	20.16	BEGIN SPECIAL DITCH

HYDROLOGIC & HYDRAULIC SUMMARY

FLOOD FREQUENCY [YR]	50	100	500
ANNUAL EXCEEDANCE PROBABILITY [%]	2	1	0.2
DISCHARGE [CFS]	1,320	1,520	2,010
WATER SURFACE ELEVATION [FT]	22.2	22.5	23.1
DESIGN HIGH WATER ELEVATION* [FT]	–	25.5	–
ANTICIPATED ADDITIONAL BACKWATER [FT]	0.4	0.4	0.4
ABUTMENT SCOUR [FT]	0.0	0.0	0.0
CONTRACTION SCOUR [FT]	3.5	3.6	4.5
PIER SCOUR [FT]	4.6	4.8	5.1
DRAINAGE AREA: 18 SQUARE MILES			
WATER SURFACE ELEVATION LOCATION: 18 FT UPSTREAM OF PROPOSED BRIDGE			

GRAPHIC SCALE

20 0 20 40

(IN FEET)

NOTES:

1. CONTOURS SHOWN ARE FINISHED GRADE PASTED INTO EXISTING GROUND AT 1' INTERVALS.

DESIGNED BY: XXXX	CHECKED: XXXX	PLANS DEVELOPED BY: R&M CONSULTANTS, INC. 9101 VANGUARD DR ANCHORAGE, AK 99507 (907) 522-1707 CERT. OF AUTH. NO. AECC111	STATE OF ALASKA DEPARTMENT OF TRANSPORTATION AND PUBLIC FACILITIES BRIDGE SECTION	INDIAN CREEK BRIDGE SEWARD HIGHWAY RIPRAP LAYOUT	BRIDGE NO. 644	
DRAWN BY: M FRUTIGER	CHECKED: XXXX				DWG. NO. 3	
QUANTITIES BY: XXXX	CHECKED: XXXX					

STATE	PROJECT DESIGNATION	YEAR	SHEET NO.	TOTAL SHEETS
ALASKA	0A31056/CFHWY00011	2019	N7	N29

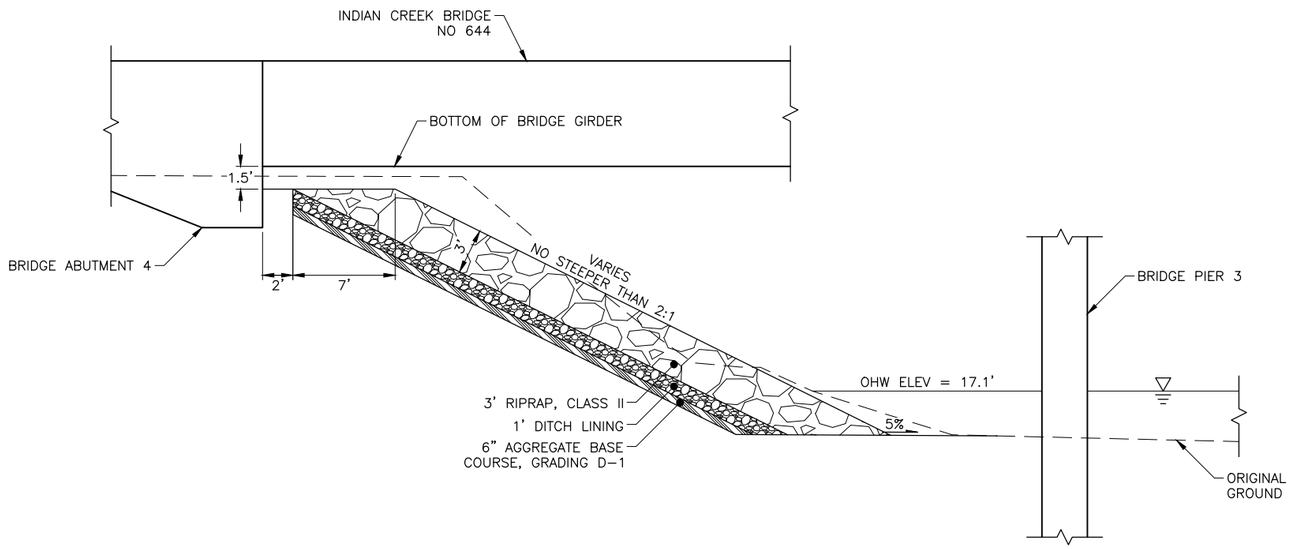

SECTION A–A'

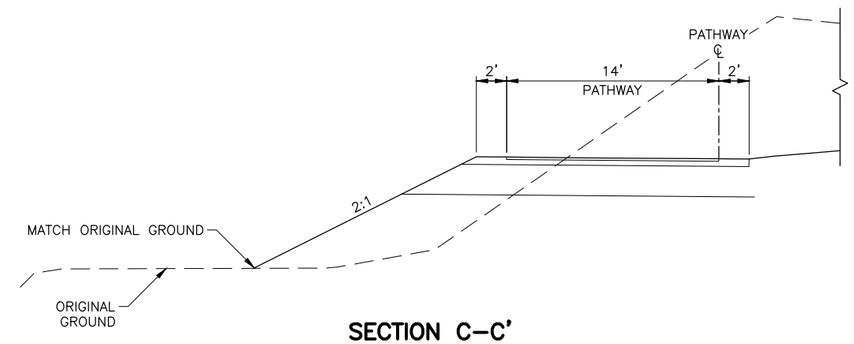

SECTION C–C'

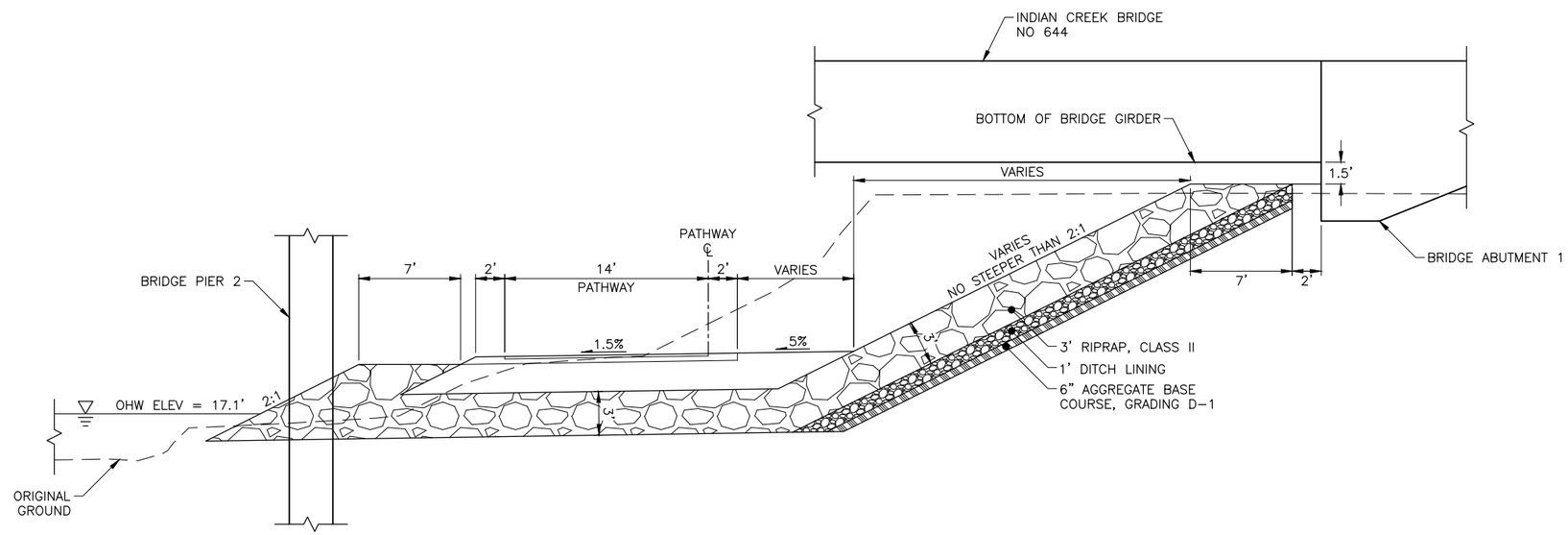

SECTION B–B'

STA 206+75 TO STA 208+50

DESIGNED BY: XXXX	CHECKED: XXXX	PLANS DEVELOPED BY: R&M CONSULTANTS, INC. 9101 VANGUARD DR ANCHORAGE, AK 99507 (907) 522–1707 CERT. OF AUTH. NO. AECC111		STATE OF ALASKA DEPARTMENT OF TRANSPORTATION AND PUBLIC FACILITIES BRIDGE SECTION		INDIAN CREEK BRIDGE SEWARD HIGHWAY RIPRAP DETAILS	BRIDGE NO. 644
DRAWN BY: J SHAW	CHECKED: XXXX						DWG. NO. 4
QUANTITIES BY: XXXX	CHECKED: XXXX						

STATE	PROJECT DESIGNATION	YEAR	SHEET NO.	TOTAL SHEETS
ALASKA	0A31056/CFHWY00011	2019	N8	N29

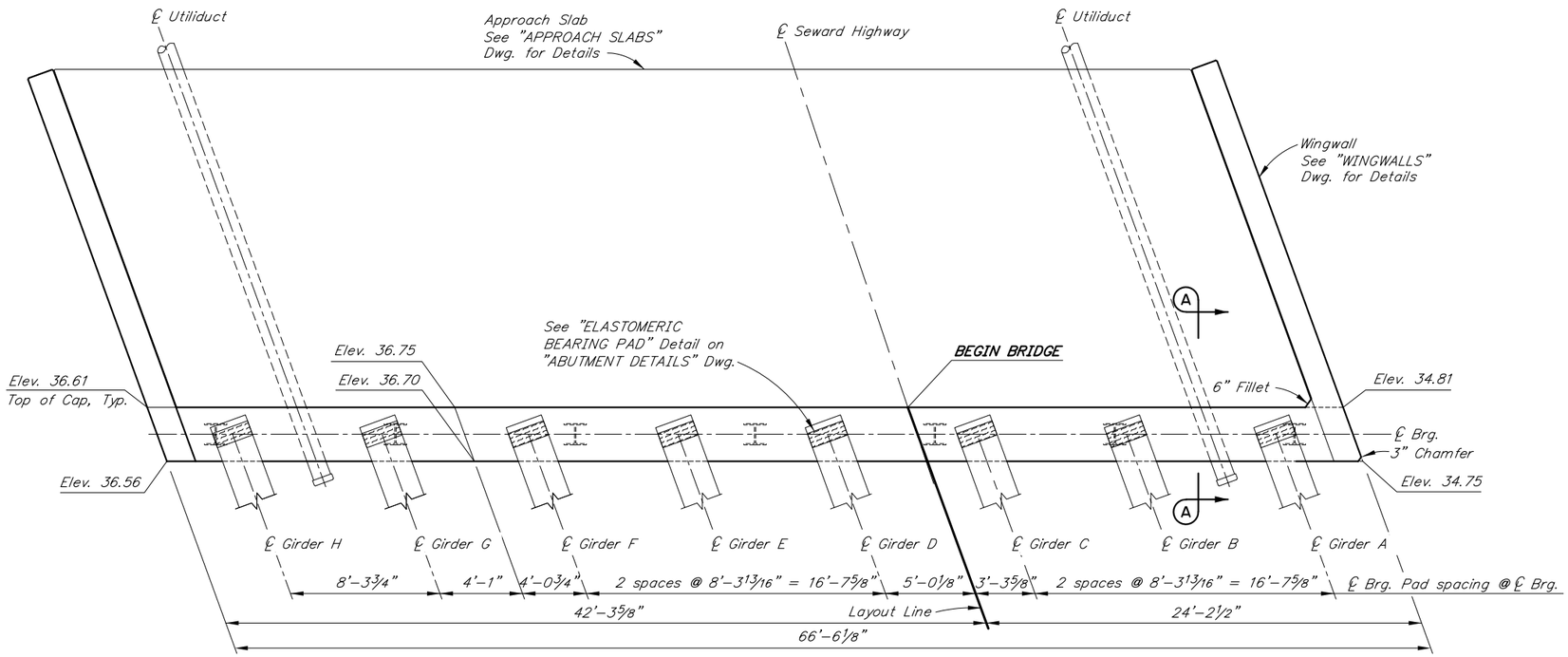

PLAN

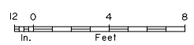

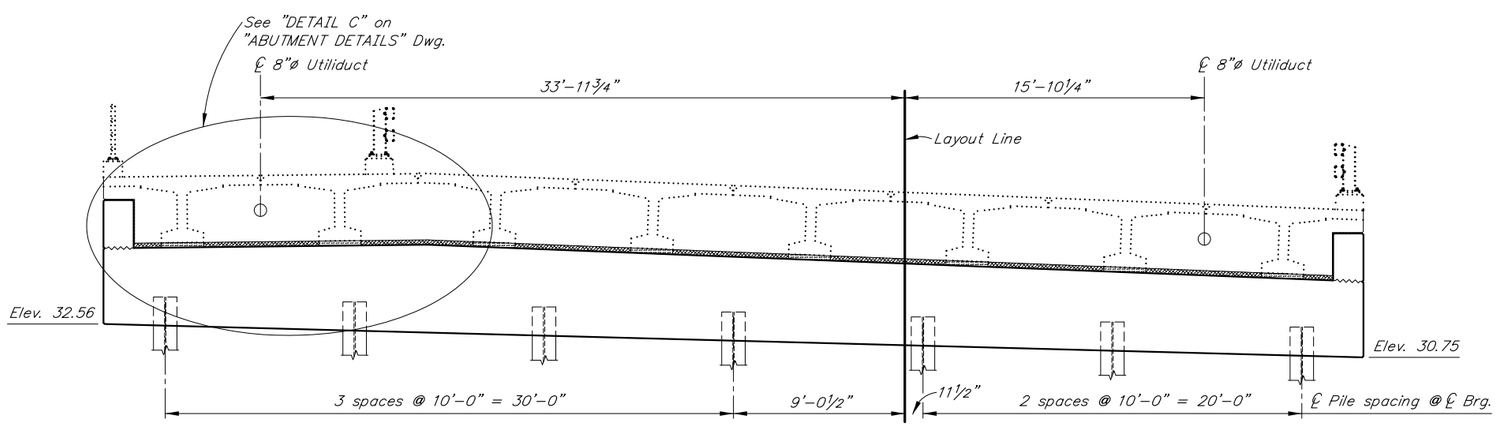

ELEVATION

(Looking Back on Station)

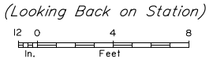

REINFORCING STEEL - ABUTMENT I

MARK	NOTE	SIZE	NO.	LENGTH	TYPE	BENDING DIAGRAM
A401		4	164	VARIES	STIRRUP	
A501	E	5	62	12'-5"	STIRRUP	
A601		6	10	66'-2"	---	
A602	E	6	5	62'-9"	---	
A603	E	6	7	5'-6"	---	
A604	E,M	6	7	66'-2"	---	
A701	E	4	8	3'-0"	BENT	
A1001	H,M	10	10	66'-2"	HEADED	

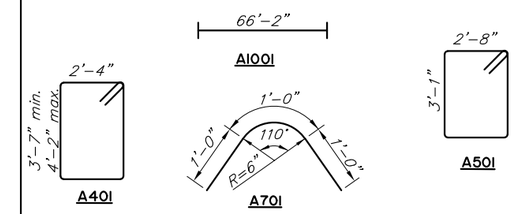

E – Epoxy-Coated
H – Headed reinforcing steel
M – Field adjust to match cross slope
S – Splice permitted. Splice length not included

DESIGNED BY: Elmer Marx	CHECKED: David McAdoo		
DRAWN BY: Sam Sollie	CHECKED: Elmer Marx		
QUANTITIES BY: Elmer Marx	CHECKED: David McAdoo		

STATE OF ALASKA
DEPARTMENT OF TRANSPORTATION AND PUBLIC FACILITIES
BRIDGE SECTION
3132 Channel Drive
Juneau, Alaska 99801
907-465-2975

INDIAN CREEK BRIDGE

SEWARD HIGHWAY

ABUTMENT 1

BRIDGE NO. 644
DWG. NO. 5

R:\cad\644\644-1-ABUT 1 Thu, Jan/31/19 07:12am

STATE	PROJECT DESIGNATION	YEAR	SHEET NO.	TOTAL SHEETS
ALASKA	0A31056/CFHWY00011	2019	N9	N29

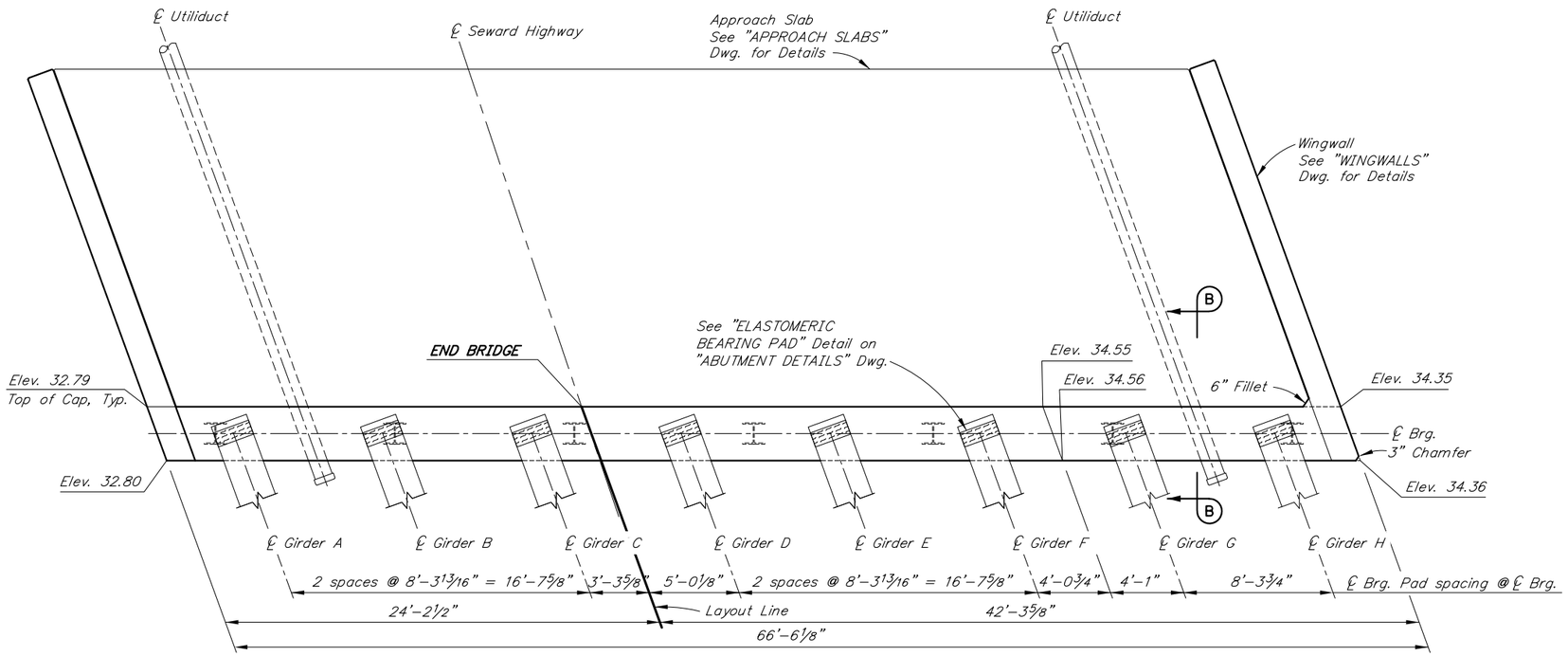

PLAN

12 0 4 8
In. Feet

REINFORCING STEEL - ABUTMENT 4

MARK	NOTE	SIZE	NO.	LENGTH	TYPE	BENDING DIAGRAM
A401		4	164	VARIES	STIRRUP	
A501	E	5	62	12'-5"	STIRRUP	
A601		6	10	66'-2"	---	
A602	E	6	5	62'-9"	---	
A603	E	6	7	5'-6"	---	
A604	E,M	6	7	66'-2"	---	
A701	E	4	8	3'-0"	BENT	
A1001	H,M	10	10	66'-2"	HEADED	

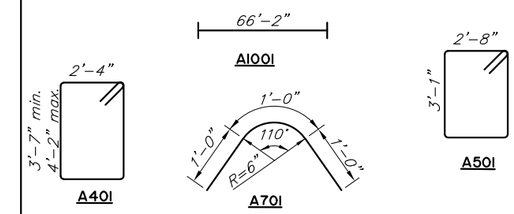

E – Epoxy-Coated
H – Headed reinforcing steel
M – Field adjust to match cross slope
S – Splice permitted. Splice length not included

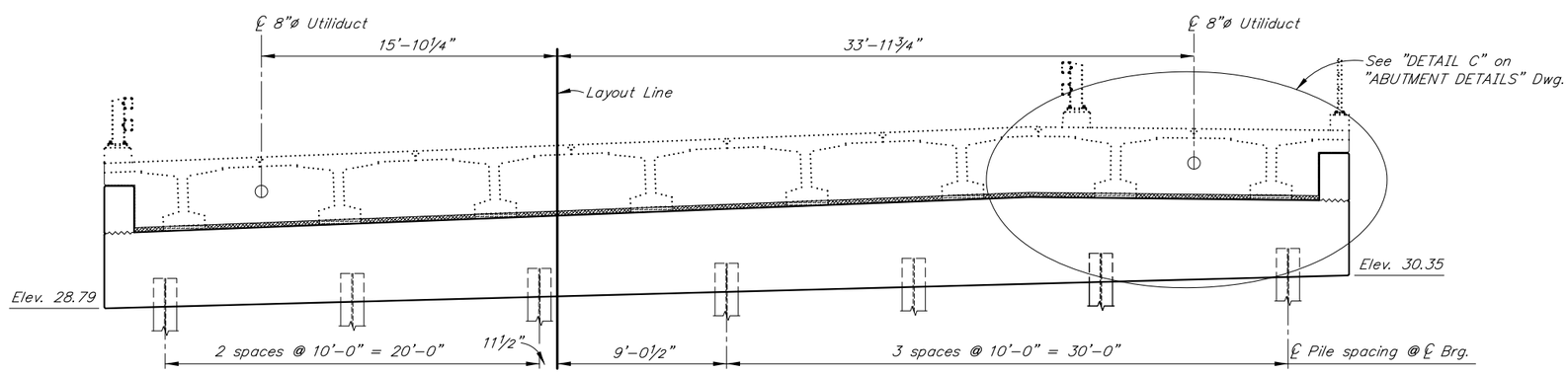

ELEVATION

12 0 4 8
In. Feet

DESIGNED BY: Elmer Marx	CHECKED: David McAdoo	STATE OF ALASKA DEPARTMENT OF TRANSPORTATION AND PUBLIC FACILITIES BRIDGE SECTION 3132 Channel Drive Juneau, Alaska 99801 907-465-2975	INDIAN CREEK BRIDGE SEWARD HIGHWAY ABUTMENT 4
DRAWN BY: Sam Sollie	CHECKED: Elmer Marx		BRIDGE NO. 644
QUANTITIES BY: Elmer Marx	CHECKED: David McAdoo		DWG. NO. 6

R:\cad\644\644-1-ABUT 4 Thu, Jan/31/19 07:12am

STATE	PROJECT DESIGNATION	YEAR	SHEET NO.	TOTAL SHEETS
ALASKA	0A31056/CFHWY00011	2019	N10	N29

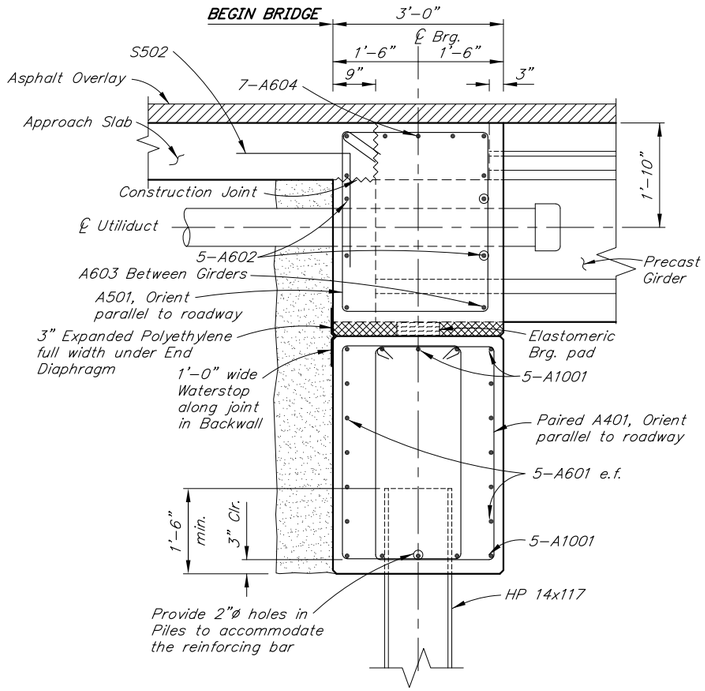

SECTION A-A

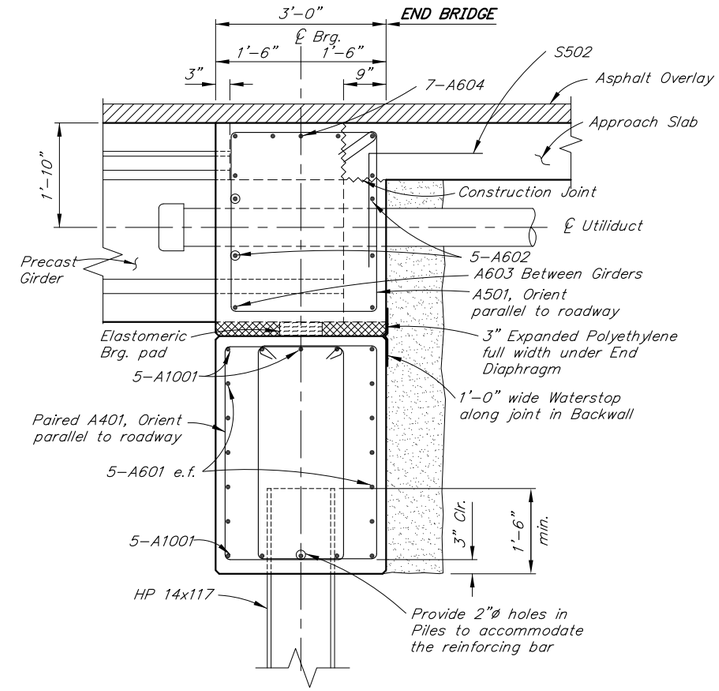

SECTION B-B

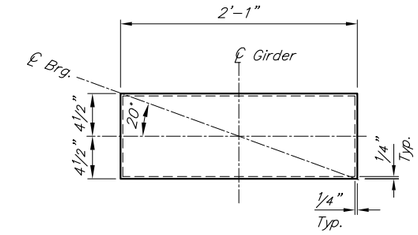

PLAN

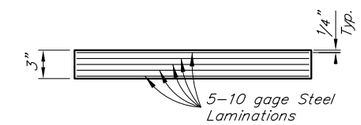

ELEVATION
ELASTOMERIC BEARING PAD

Grade 5
Shear Modulus = 0.115 ksi
Dead Load = 70 k
Live Load = 83 k

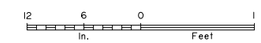

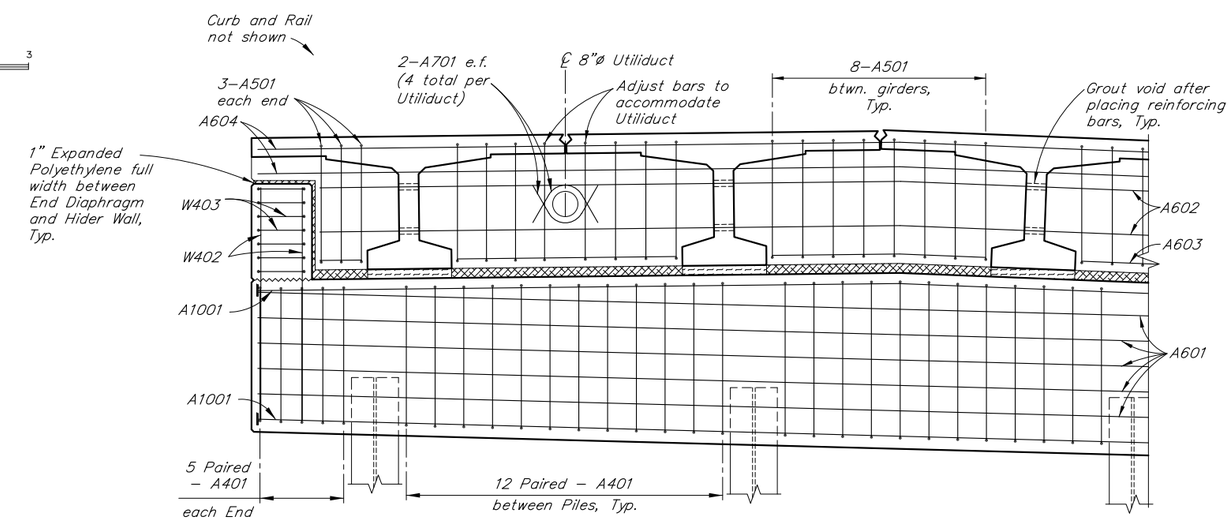

DETAIL C

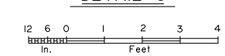

DESIGNED BY: Elmer Marx	CHECKED: David McAdoo	STATE OF ALASKA **DEPARTMENT OF TRANSPORTATION AND PUBLIC FACILITIES** BRIDGE SECTION 3132 Channel Drive Juneau, Alaska 99801 907-465-2975	**INDIAN CREEK BRIDGE** SEWARD HIGHWAY **ABUTMENT DETAILS**
DRAWN BY: Sam Sollie	CHECKED: Elmer Marx		BRIDGE NO. 644
QUANTITIES BY: Elmer Marx	CHECKED: David McAdoo		DWG. NO. 7

R:\cad\644\644-1-ABUT DET Thu, Jan/31/19 07:12am

STATE	PROJECT DESIGNATION	YEAR	SHEET NO.	TOTAL SHEETS
ALASKA	0A31056/CFHWY00011	2019	N11	N29

REINFORCING STEEL - ONE ABUTMENT

MARK	NOTE	SIZE	NO.	LENGTH	TYPE	BENDING DIAGRAM
W401		4	84	VARIES	---	
W402		4	12	6'-0"	---	
W403		4	14	8'-5"	STIRRUP	
W501		5	18	VARIES	---	
W901		9	4	VARIES	BENT	
W902		9	18	VARIES	---	
W903		9	4	VARIES	BENT	
C403	D,E	4	15	7'-7"	STIRRUP	
C404	E,U	4	15	4'-9"	STIRRUP	
C502	E	5	4	19'-0"	---	

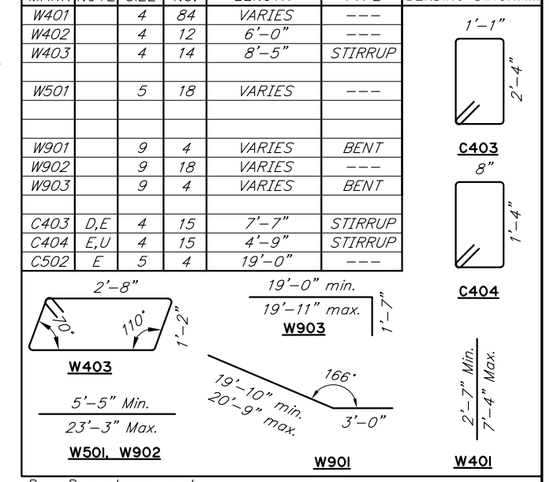

D – Downstream curb
E – Epoxy-Coated
U – Upstream curb

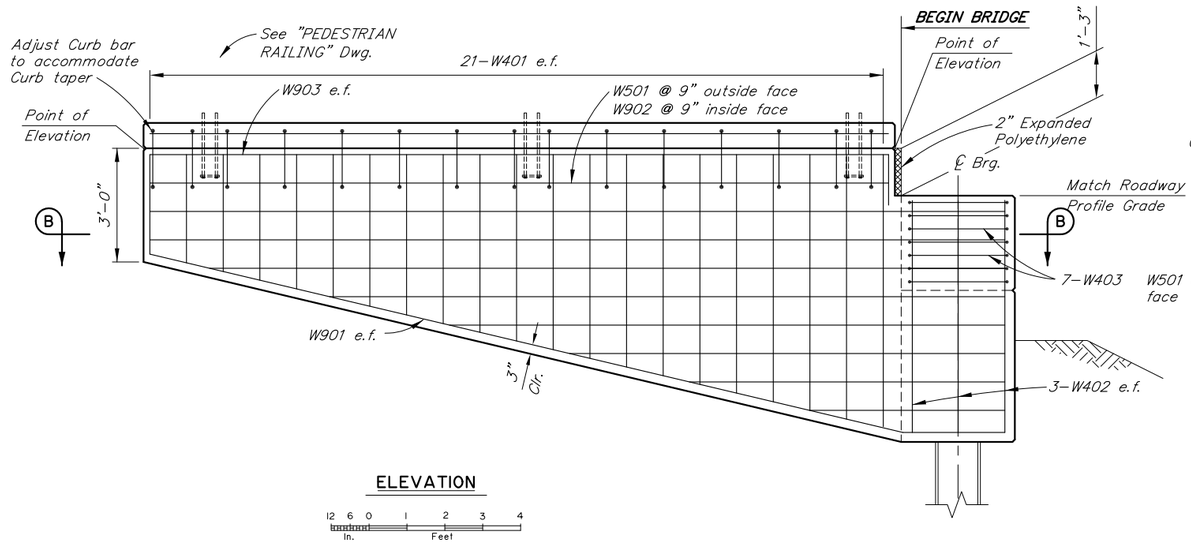

ELEVATION

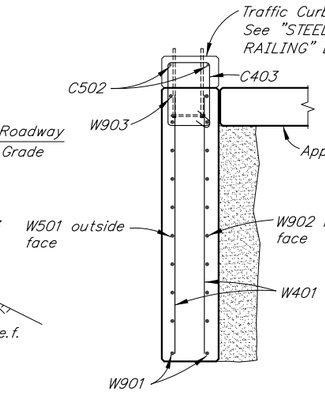

SECTION A-A

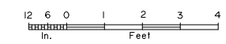

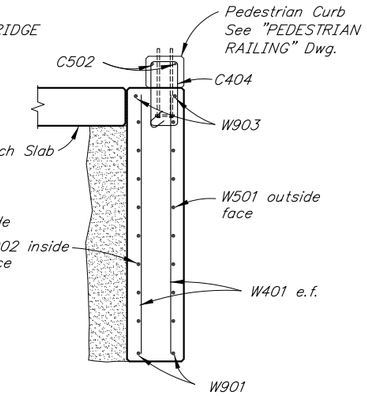

SECTION B-B

TOP OF WINGWALL ELEVATION TABLE (FT)

LOCATION	A DOWNSTREAM	B DOWNSTREAM	C UPSTREAM	D UPSTREAM
ABUTMENT 1	38.96	38.61	40.75	40.39
ABUTMENT 4	36.57	36.61	38.04	38.10

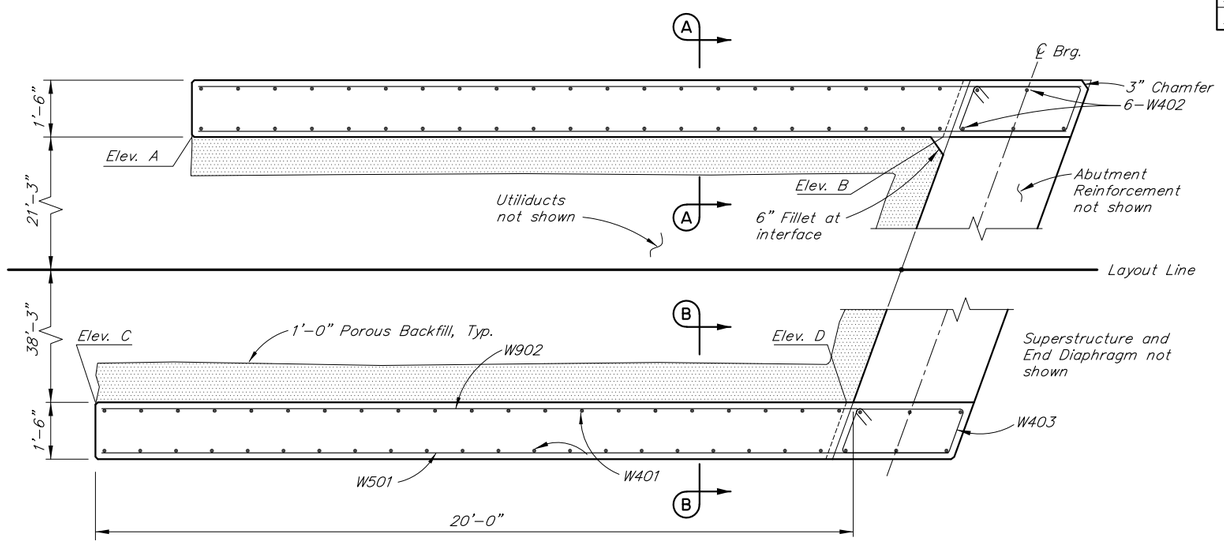

SECTION B-B

(Abut. 1 shown, Abut. 4 similar)

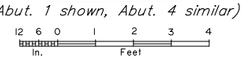

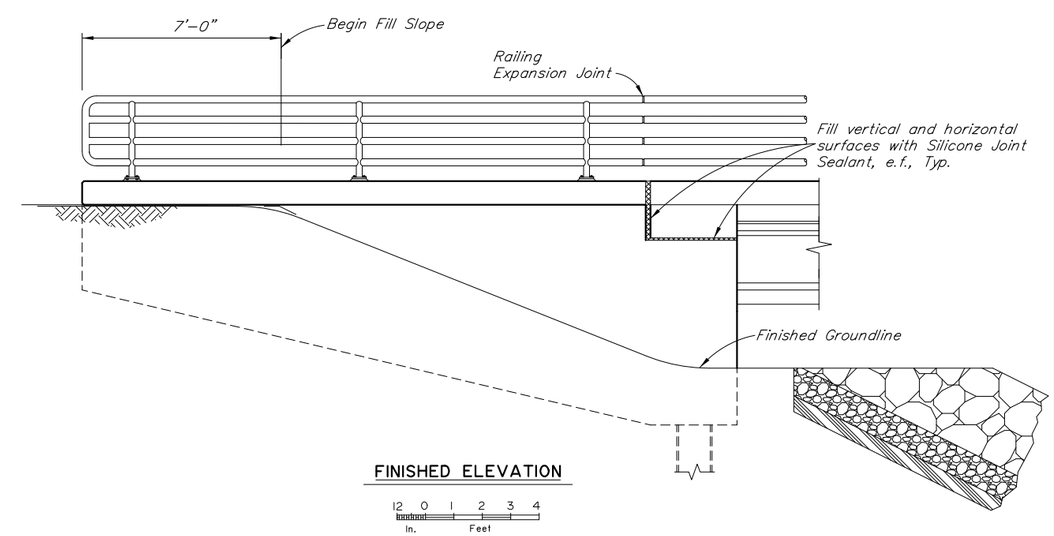

FINISHED ELEVATION

DESIGNED BY: Elmer Marx	CHECKED: David McAdoo	STATE OF ALASKA DEPARTMENT OF TRANSPORTATION AND PUBLIC FACILITIES BRIDGE SECTION 3132 Channel Drive Juneau, Alaska 99801 907-465-2975	INDIAN CREEK BRIDGE SEWARD HIGHWAY WINGWALLS
DRAWN BY: Sam Sollie	CHECKED: Elmer Marx		BRIDGE NO. 644
QUANTITIES BY: Elmer Marx	CHECKED: David McAdoo		DWG. NO. 8

R:\cad\644\644-1-WINGWALLS Thu, Jan/31/19 07:24am

STATE	PROJECT DESIGNATION	YEAR	SHEET NO.	TOTAL SHEETS
ALASKA	0A31056/CFHWY00011	2019	N12	N29

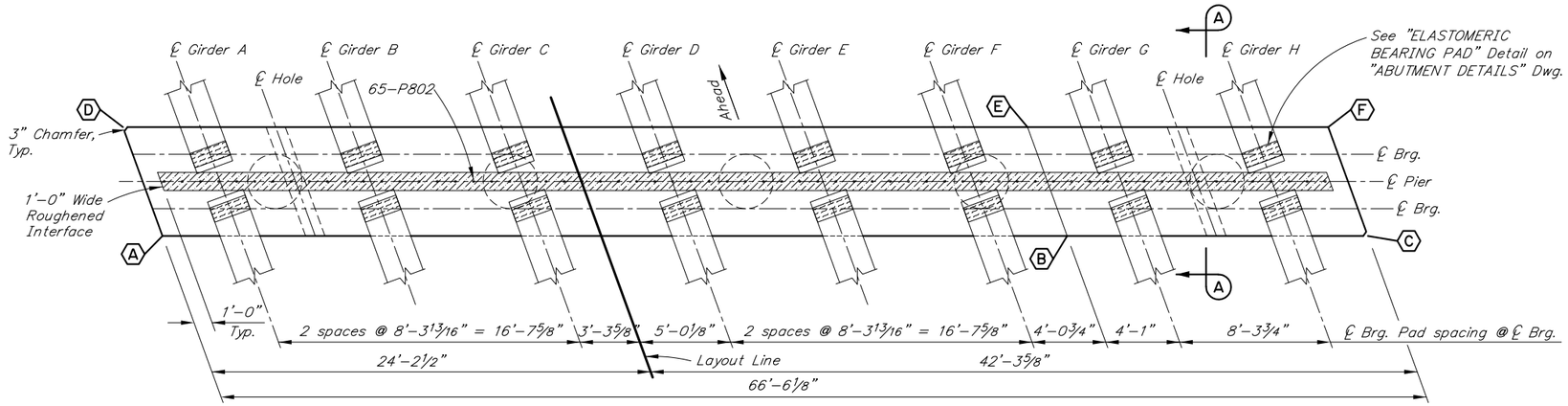

PLAN

12 0 4 8
In. Feet

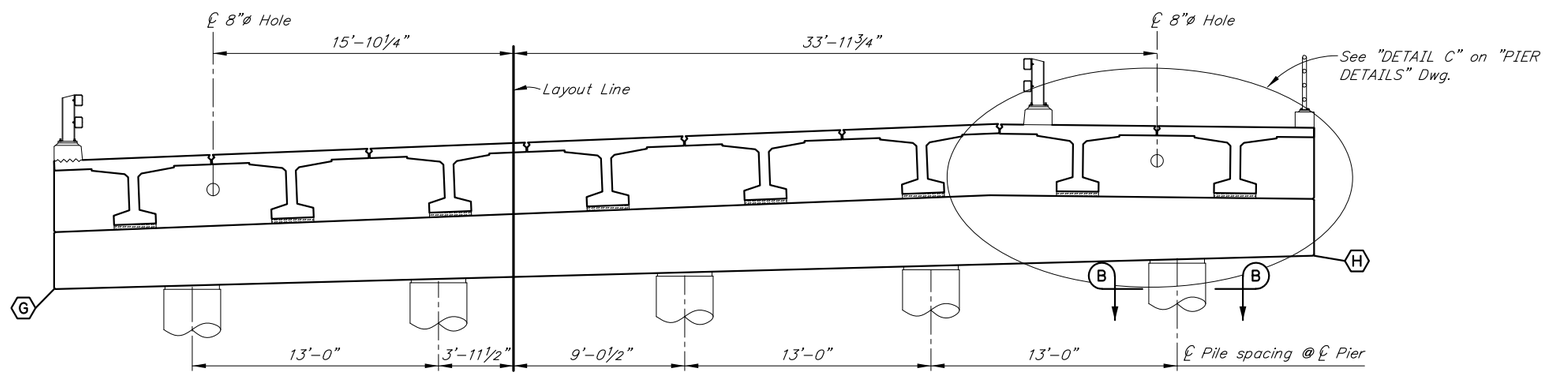

TOP OF CAP ELEVATIONS		
LOCATION	PIER 2	PIER 3
A	33.84	33.16
B	35.73	34.98
C	35.57	34.80
D	33.76	33.11
E	35.65	34.93
F	35.49	34.75
BOTTOM OF CAP ELEVATIONS		
G	30.76	30.11
H	32.49	31.75

ELEVATION

12 0 4 8
In. Feet

R:\cad\644\644-1-PIERS Thu, Jan/31/19 07:12am

DESIGNED BY: Elmer Marx	CHECKED: David McAdoo		
DRAWN BY: Sam Sollie	CHECKED: Elmer Marx		
QUANTITIES BY: Elmer Marx	CHECKED: David McAdoo		

STATE OF ALASKA
DEPARTMENT OF TRANSPORTATION AND PUBLIC FACILITIES
BRIDGE SECTION
3132 Channel Drive
Juneau, Alaska 99801
907-465-2975

INDIAN CREEK BRIDGE

SEWARD HIGHWAY

PIERS

BRIDGE NO. 644
DWG. NO. 9

STATE	PROJECT DESIGNATION	YEAR	SHEET NO.	TOTAL SHEETS
ALASKA	0A31056/CFHWY00011	2019	N13	N29

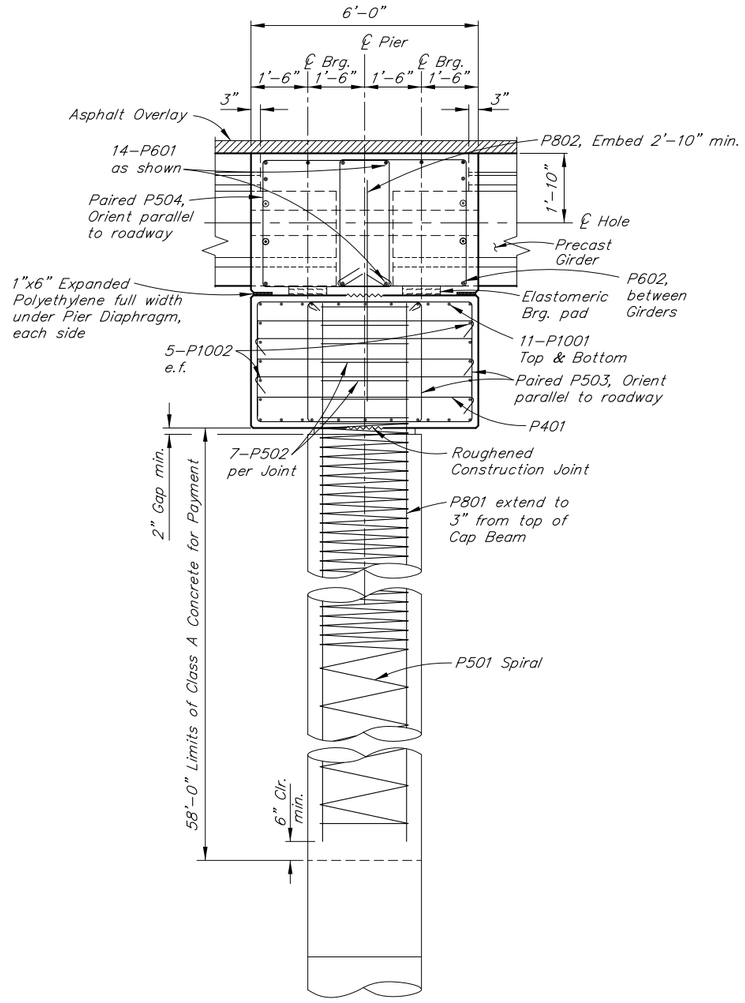

SECTION A-A

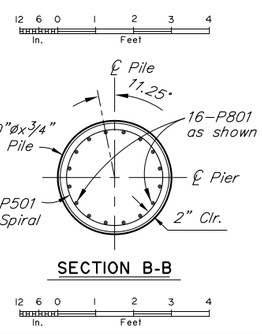

SECTION B-B

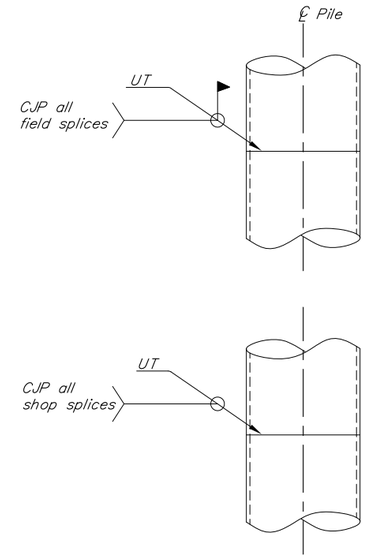

PIPE SPLICE DETAIL

No Scale

REINFORCING STEEL - ONE PIER

MARK	NOTE	SIZE	NO.	LENGTH	TYPE	BENDING DIAGRAM
P401		4	50	7'-0"	TIE	P401
P501	S	5	5	757'-0"	SPIRAL	P501
P502		5	35	8'-10"	HOOP	P502
P503		5	256	VARIES	STIRRUP	P503
P504		5	132	14'-7"	STIRRUP	P504
P601	E,M,S	6	14	66'-2"	---	
P602	E	6	14	5'-6"	---	
P603	E	6	4	2'-8"	---	
P701	E	4	8	3'-0"	BENT	P701
P801		8	80	60'-0"	---	
P802		8	65	6'-0"	---	
P1001	H,M,S	10	22	66'-2"	HEADED	P1001
P1002	S	10	10	66'-2"	---	

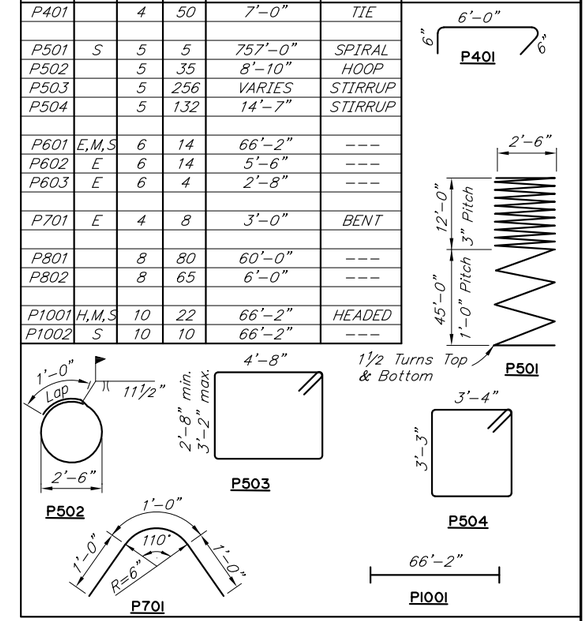

E – Epoxy-Coated
H – Headed reinforcing steel
M – Field adjust to match cross slope
S – Splice permitted. Splice length not included

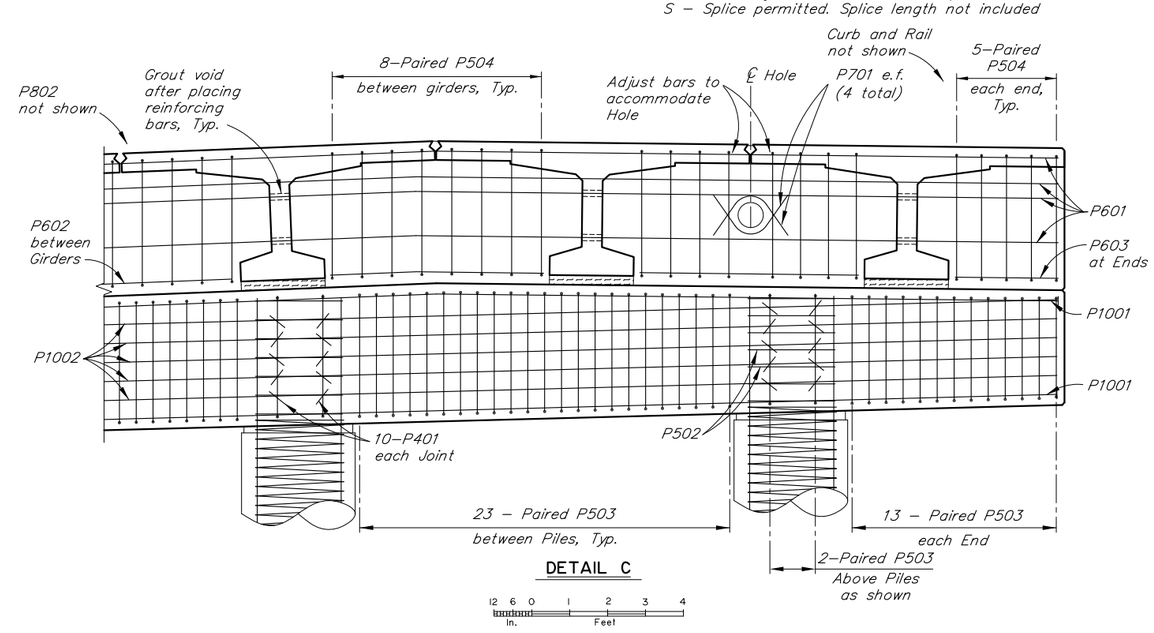

DETAIL C

DESIGNED BY: Elmer Marx	CHECKED: David McAdoo	STATE OF ALASKA DEPARTMENT OF TRANSPORTATION AND PUBLIC FACILITIES BRIDGE SECTION 3132 Channel Drive Juneau, Alaska 99801 907-465-2975	INDIAN CREEK BRIDGE SEWARD HIGHWAY PIER DETAILS
DRAWN BY: Sam Sollie	CHECKED: Elmer Marx		BRIDGE NO. 644
QUANTITIES BY: Elmer Marx	CHECKED: David McAdoo		DWG. NO. 10

R:\cad\644\644-1-PIER DET Thu, Jan/31/19 07:12am

STATE	PROJECT DESIGNATION	YEAR	SHEET NO.	TOTAL SHEETS
ALASKA	0A31056/CFHWY00011	2019	N14	N29

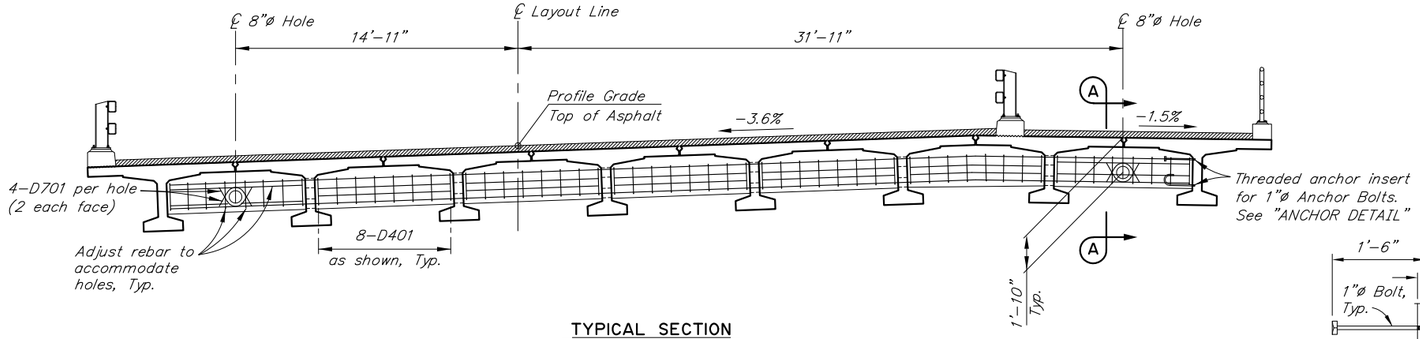

TYPICAL SECTION

12 0 4 8
In. Feet

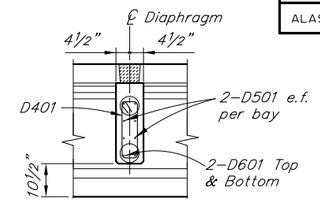

SECTION A-A

12 6 0 1 2 3 4
In. Feet

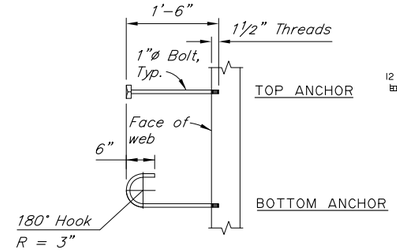

ASTM A307 GALVANIZED

ANCHOR DETAIL

No Scale

REINFORCING STEEL - ONE DIAPHRAGM

MARK	NOTE	SIZE	NO.	LENGTH	TYPE
D401	E	4	56	4'-3"	STIRRUP
D501	E	5	28	7'-4"	---
D601	E,M	6	4	57'-3"	---
D701	E	7	8	3'-0"	BENT

BENDING DIAGRAM

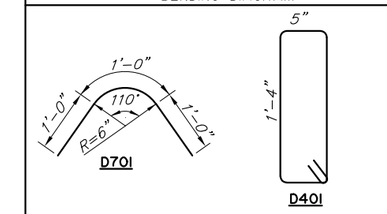

E – Epoxy-Coated
M – Field adjust to match cross slope

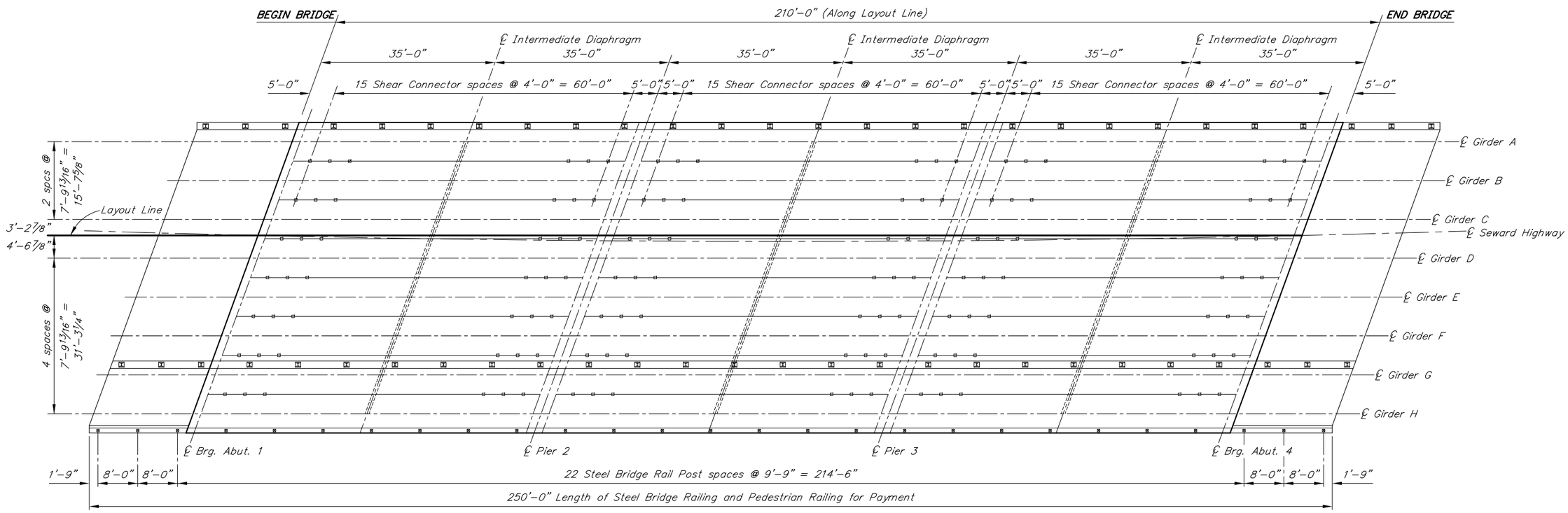

FRAMING PLAN

12 0 5 10 15 20
In. Feet

DESIGNED BY: Elmer Marx	CHECKED: David McAdoo	STATE OF ALASKA DEPARTMENT OF TRANSPORTATION AND PUBLIC FACILITIES BRIDGE SECTION 3132 Channel Drive Juneau, Alaska 99801 907-465-2975	INDIAN CREEK BRIDGE SEWARD HIGHWAY FRAMING PLAN AND TYPICAL SECTION	BRIDGE NO. 644 DWG. NO. 11
DRAWN BY: Sam Sollie	CHECKED: Elmer Marx			
QUANTITIES BY: Elmer Marx	CHECKED: David McAdoo			

R:\cad\644\644-1-TYPICAL Thu, Jan/31/19 07:12am

STATE	PROJECT DESIGNATION	YEAR	SHEET NO.	TOTAL SHEETS
ALASKA	0A31056/CFHWY00011	2019	N15	N29

REINFORCING STEEL-ONE GIRDER

MARK	NOTE	SIZE	NO.	LENGTH	TYPE
G401	E	4	140	VARIES	BENT
G401X	E	4	179	VARIES	BENT
G402	E,L	4	12	64'-0"	---
G402X	E,L	4	16	64'-0"	---
G403	E	4	280	4'-8"	BENT
G404	E	4	56	3'-3"	BENT
G501	E	5	140	VARIES	---
G501X	E	5	179	VARIES	BENT
G502	E,L	5	12	69'-6"	BENT
G502X	E,L	5	16	69'-6"	BENT
G601	E	6	16	4'-8"	BENT
C401	E,L	4	62	4'-9"	BENT
C402	E,L	4	62	4'-4"	BENT
C501X	E,S	5	2	209'-8"	---
C502	E,S	5	2	209'-8"	---

BENDING DIAGRAM

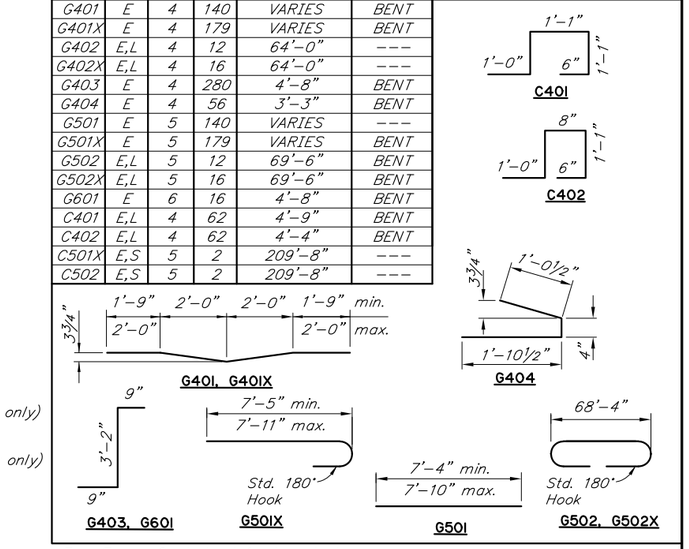

E – Epoxy-Coated reinforcing steel
L – Ship 6 loose per exterior girder
S – Splices permitted. Length does not include splices
X – Exterior girders only

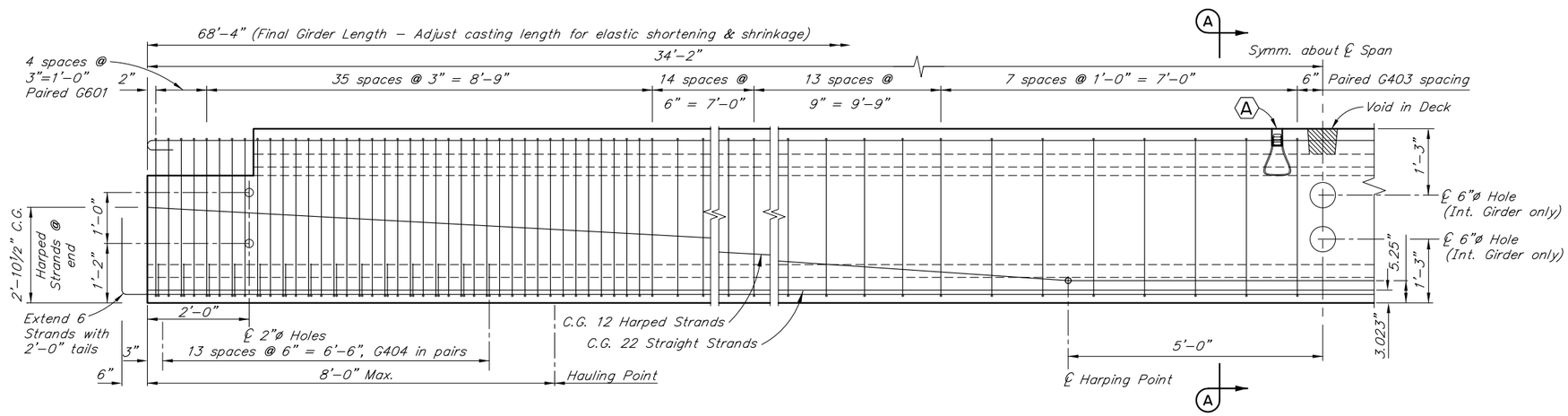

ELEVATION

No Scale

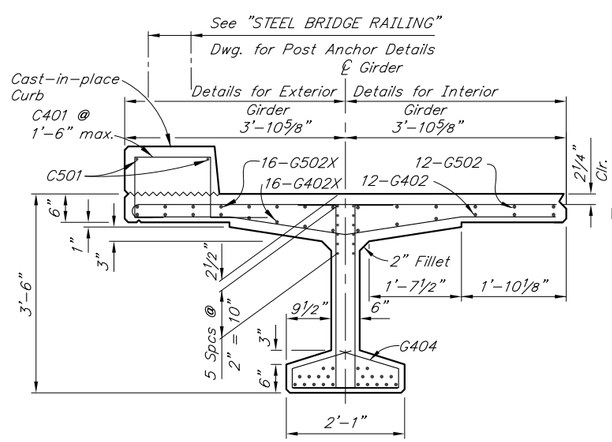

END VIEW

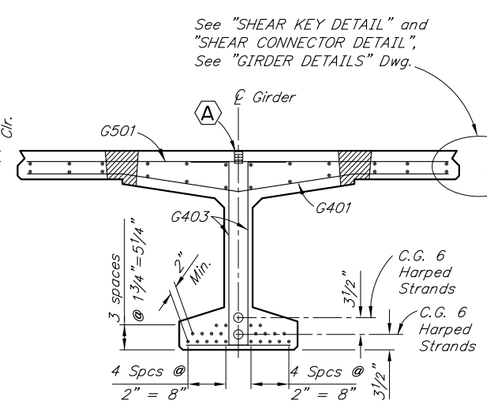

SECTION A-A

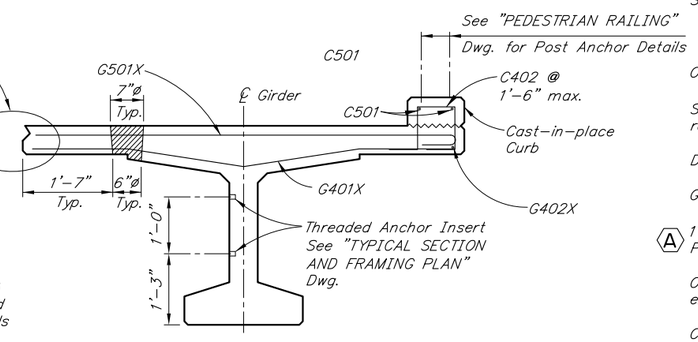

EXTERIOR MIDSPAN SECTION

(Unrelated reinforcing not shown)

GIRDER NOTES

Class P Concrete: at Stress Transfer.....f'ci = 6,500 psi
at 28 Days.....f'c = 7,500 psi

½"ø low-relaxation prestressing strands with an ultimate strength of 270 ksi and a cross sectional area of 0.153 in².

Steel stresses: Pretensioning – Jacking Stress 189 ksi
After initial losses 174 ksi
After all losses 144 ksi

One inch clear cover on reinforcing steel unless otherwise noted.

See "FRAMING PLAN AND TYPICAL SECTION" Dwg. for shear connector spacing, rail post spacing, and drain spacing.

Deflect forms to compensate for camber.

Galvanize structural steel embedded in girders except for shear connectors.

(A) 1"X1'-0" Coil Anchor Insert for vertical adjustment of girders. Recess 3". Prevent concrete from filling hole.

Omit Shear Key, Shear Key Connector and Deck Void in exterior face of exterior girders.

Cast ends of girders plumb with respect to roadway grade. Install web holes and web anchor inserts parallel to ℄ bearing.

Finish top flange with light broom finish. Roughen the surface under the Curbs.

DESIGNED BY: Elmer Marx	CHECKED: David McAdoo		
DRAWN BY: Sam Sollie	CHECKED: Elmer Marx		
QUANTITIES BY: Elmer Marx	CHECKED: David McAdoo		

STATE OF ALASKA
DEPARTMENT OF TRANSPORTATION AND PUBLIC FACILITIES
BRIDGE SECTION
3132 Channel Drive
Juneau, Alaska 99801
907-465-2975

INDIAN CREEK BRIDGE

SEWARD HIGHWAY

GIRDERS

BRIDGE NO. 644
DWG. NO. 12

R:\cad\644\644-1-GIRDER Thu, Jan/31/19 07:12am

STATE	PROJECT DESIGNATION	YEAR	SHEET NO.	TOTAL SHEETS
ALASKA	0A31056/CFHWY00011	2019	N16	N29

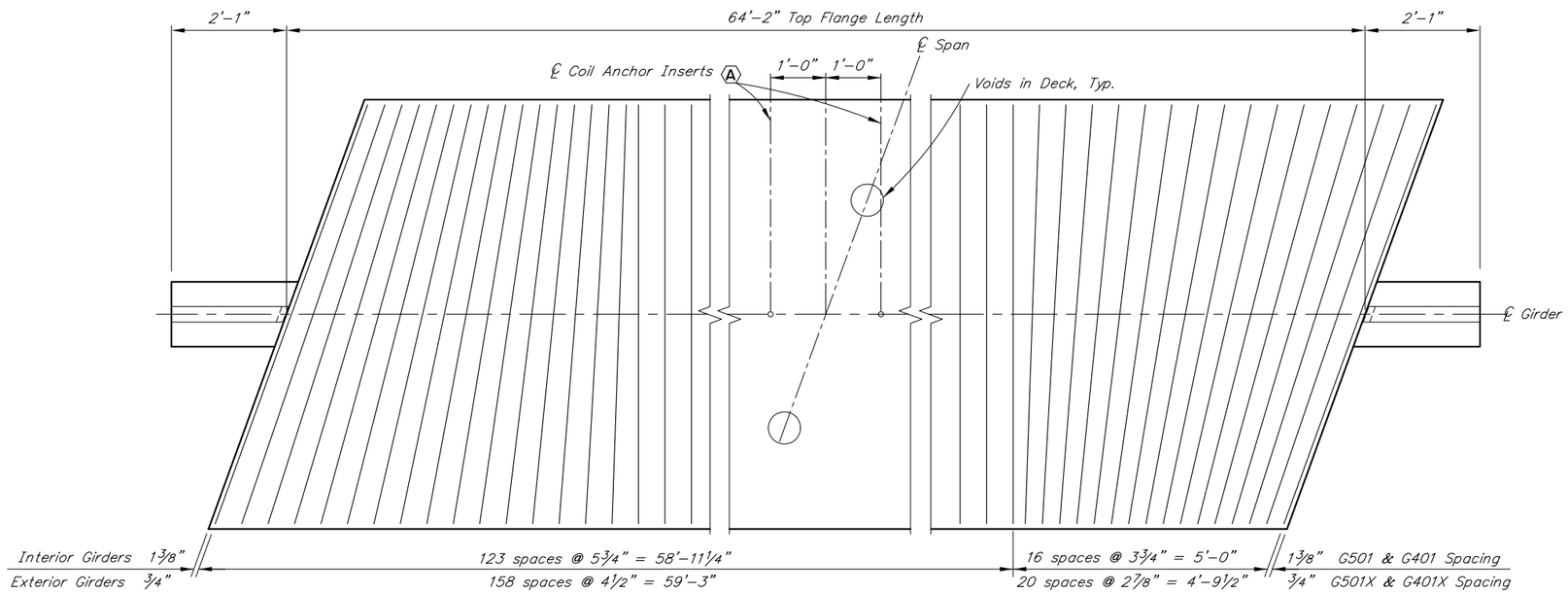

PLAN

No Scale

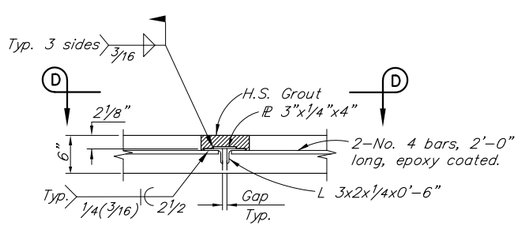

SHEAR CONNECTOR DETAIL

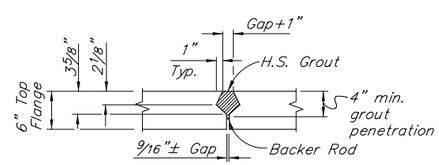

SHEAR KEY DETAIL

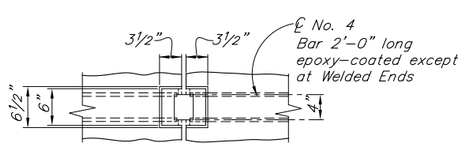

VIEW D-D

DESIGNED BY: Elmer Marx	CHECKED: David McAdoo	STATE OF ALASKA **DEPARTMENT OF TRANSPORTATION AND PUBLIC FACILITIES** BRIDGE SECTION 3132 Channel Drive Juneau, Alaska 99801 907-465-2975	**INDIAN CREEK BRIDGE** SEWARD HIGHWAY **GIRDER DETAILS**
DRAWN BY: Sam Sollie	CHECKED: Elmer Marx		BRIDGE NO. 644
QUANTITIES BY: Elmer Marx	CHECKED: David McAdoo		DWG. NO. 13

R:\cad\644\644-1-GIRD DET Thu, Jan/31/19 07:12am

STATE	PROJECT DESIGNATION	YEAR	SHEET NO.	TOTAL SHEETS
ALASKA	0A31056/CFHWY00011	2019	N17	N29

REINFORCING STEEL - ONE APPROACH SLAB

MARK	NOTE	SIZE	NO.	LENGTH	TYPE
S401	E,S	4	62	62'-10"	---
S501	E	5	119	20'-5"	---
S502	E	5	60	5'-0"	BENT
S801	E	8	119	20'-5"	---
C405	E	4	28	5'-5"	BENT

BENDING DIAGRAM

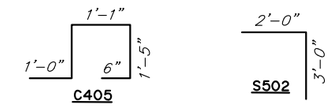

E – Epoxy-Coated
S – Splices permitted. Length does not include splices

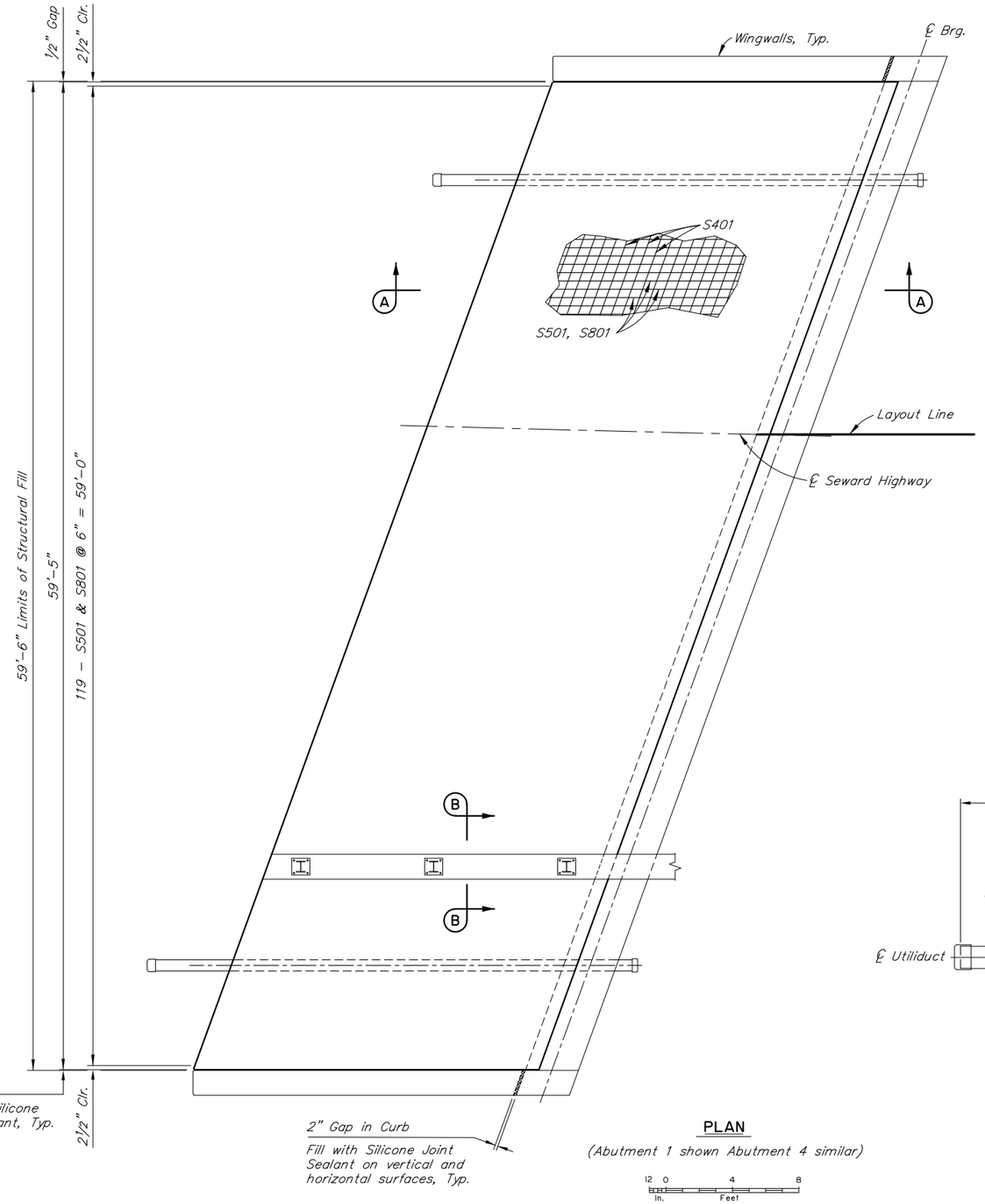

PLAN

(Abutment 1 shown Abutment 4 similar)

12 0 4 8
In. Feet

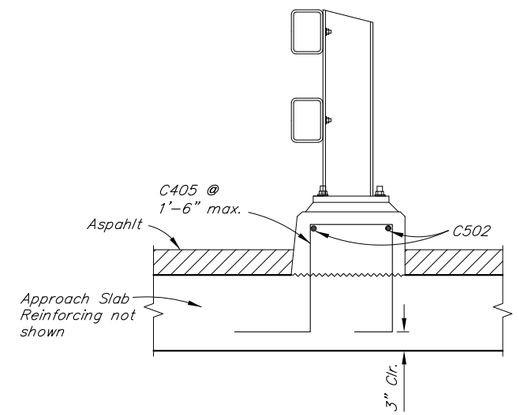

SECTION B-B

12 6 0 1 2
In. Feet

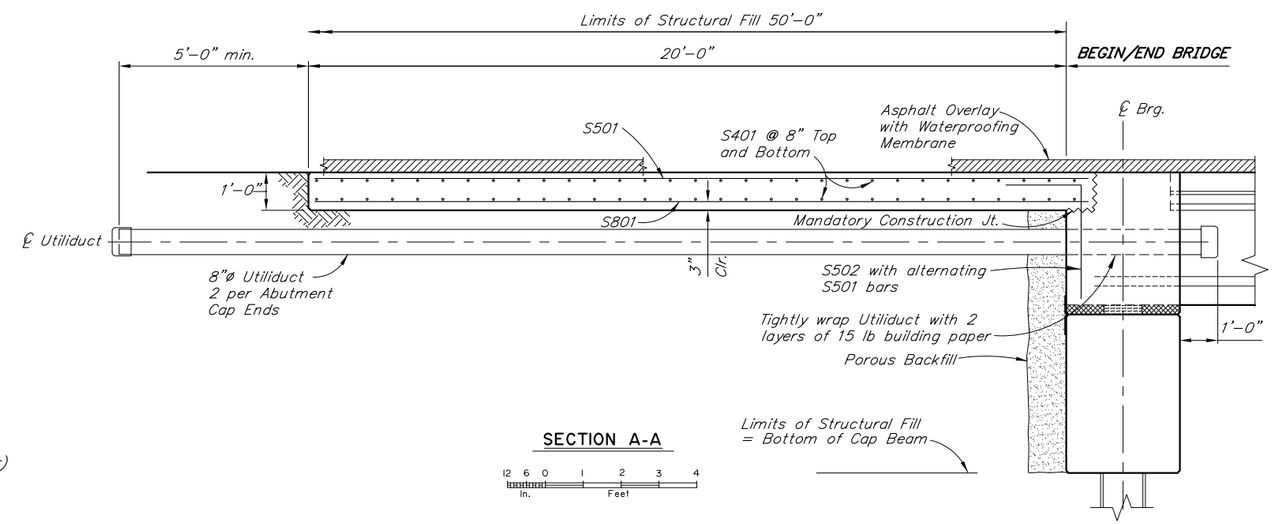

SECTION A-A

12 6 0 1 2 3 4
In. Feet

DESIGNED BY: Elmer Marx	CHECKED: David McAdoo	STATE OF ALASKA **DEPARTMENT OF TRANSPORTATION AND PUBLIC FACILITIES** BRIDGE SECTION 3132 Channel Drive Juneau, Alaska 99801 907-465-2975	**INDIAN CREEK BRIDGE** SEWARD HIGHWAY **APPROACH SLABS**
DRAWN BY: Sam Sollie	CHECKED: Elmer Marx		BRIDGE NO. 644
QUANTITIES BY: Elmer Marx	CHECKED: David McAdoo		DWG. NO. 14

R:\cad\644\644-1-APPROC Thu, Jan/31/19 07:12am

STATE	PROJECT DESIGNATION	YEAR	SHEET NO.	TOTAL SHEETS
ALASKA	0A31056/CFHWY00011	2019	N18	N29

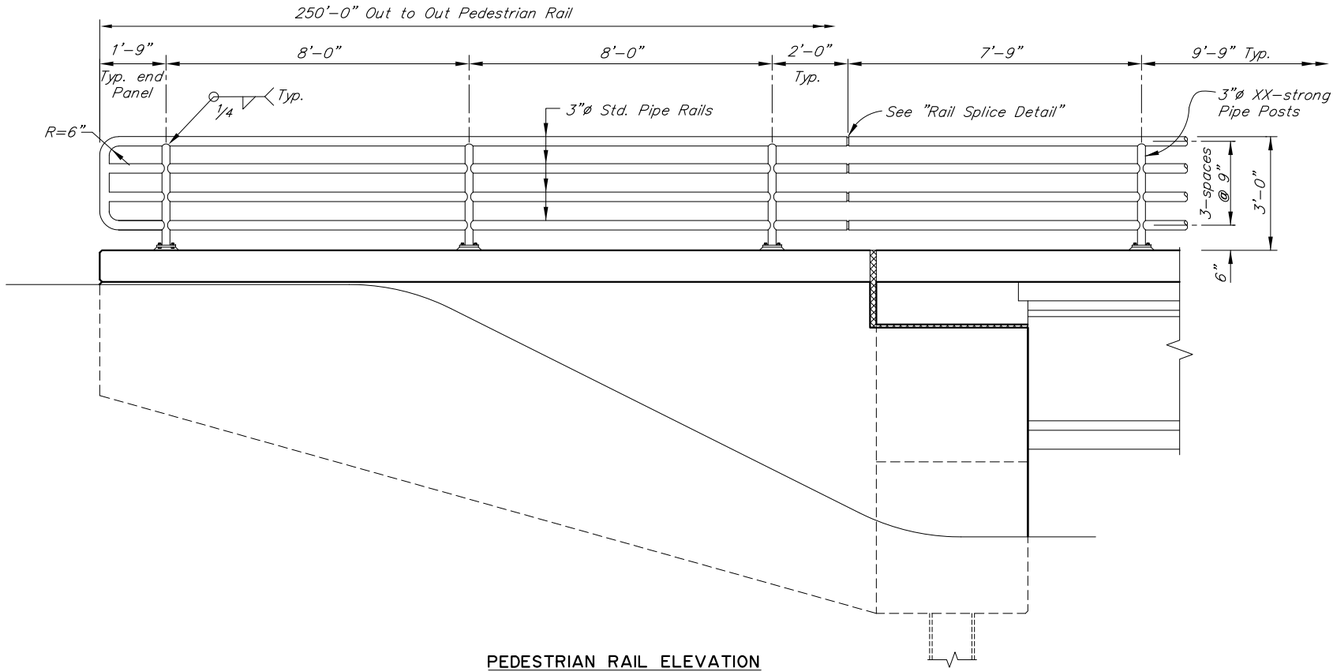

PEDESTRIAN RAIL ELEVATION

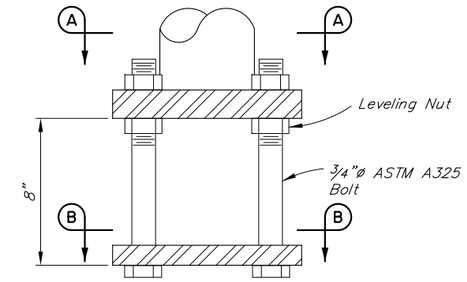

DETAIL "A"

No scale

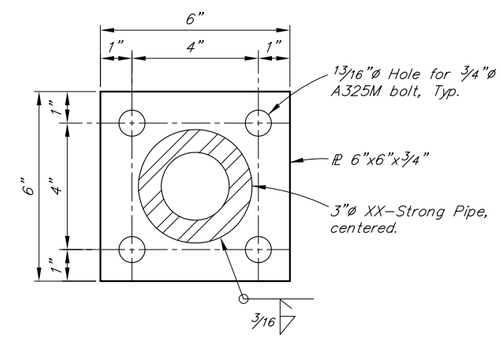

SECTION A-A

No Scale

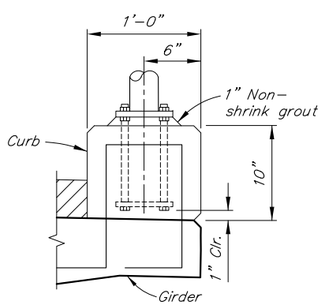

SECTION AT EDGE OF DECK

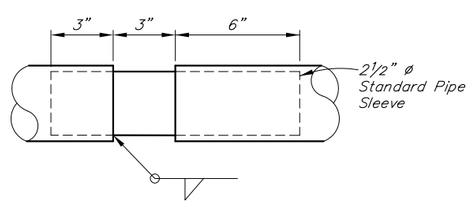

RAIL SPLICE DETAIL

No scale

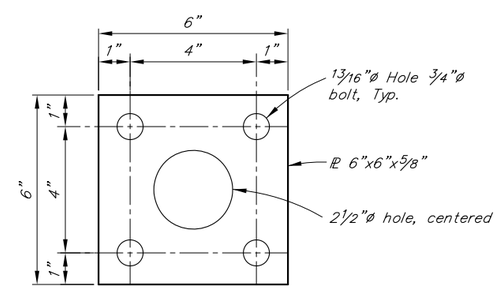

SECTION B-B

No Scale

NOTES:

1. Galvanize all steel for railing in accordance with AASHTO M111.
2. Install all rail posts plumb. Space Rail Splice @ 40' intervals, max.
3. Rail splice required at panel over abutment expansion joint.
4. See "Framing Plan" for rail post layout.

DESIGNED BY: Elmer Marx	CHECKED: David McAdoo	STATE OF ALASKA DEPARTMENT OF TRANSPORTATION AND PUBLIC FACILITIES BRIDGE SECTION 3132 Channel Drive Juneau, Alaska 99801 907-465-2975	INDIAN CREEK BRIDGE SEWARD HIGHWAY PEDESTRIAN RAILING
DRAWN BY: Sam Sollie	CHECKED: Elmer Marx		BRIDGE NO. 644
QUANTITIES BY: Elmer Marx	CHECKED: David McAdoo		DWG. NO. 15

R:\cad\644\644-1-PED RAIL Thu, Jan/31/19 07:24am

STATE	PROJECT DESIGNATION	YEAR	SHEET NO.	TOTAL SHEETS
ALASKA	0A31056/CFHWY00011	2019	N19	N29

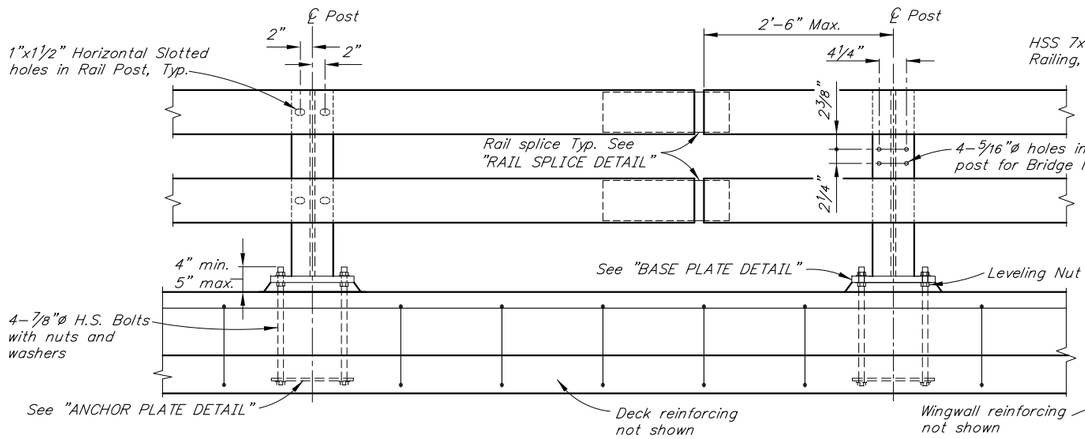

TYPICAL POST ELEVATION

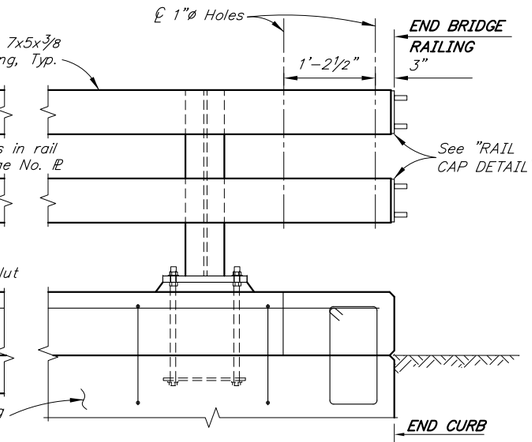

ELEVATION

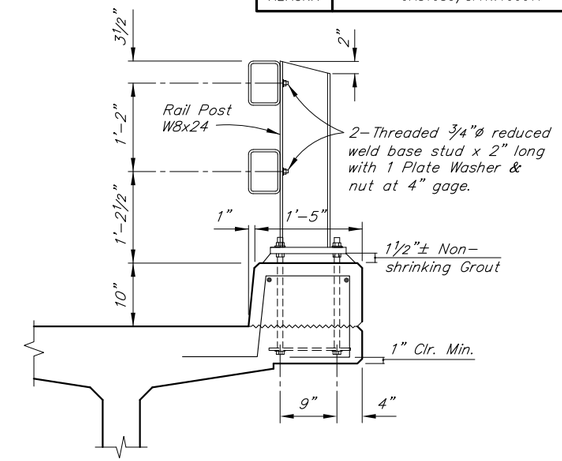

TYPICAL SECTION

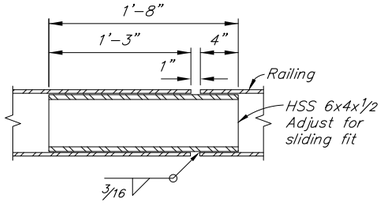

RAIL SPLICE DETAIL

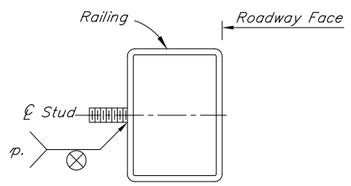

RAILING STUD DETAIL

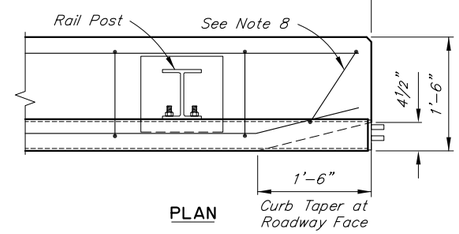

PLAN

END POST DETAIL

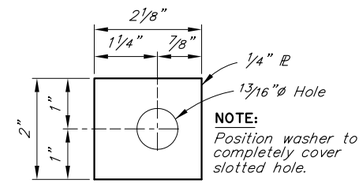

NOTE:
Position washer to completely cover slotted hole.

PLATE WASHER

No Scale

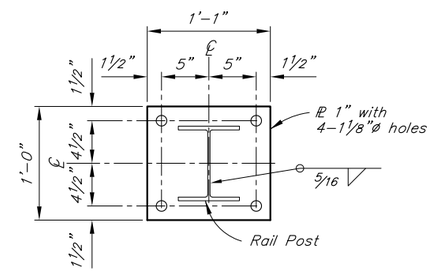

BASE PLATE DETAIL

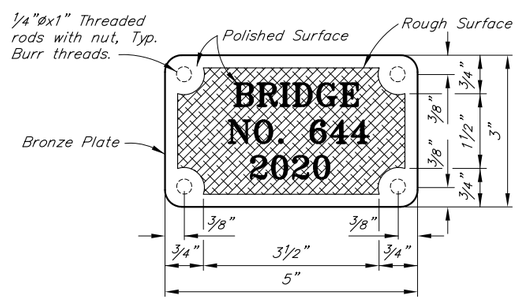

BRONZE BRIDGE NO. PLATE

No Scale

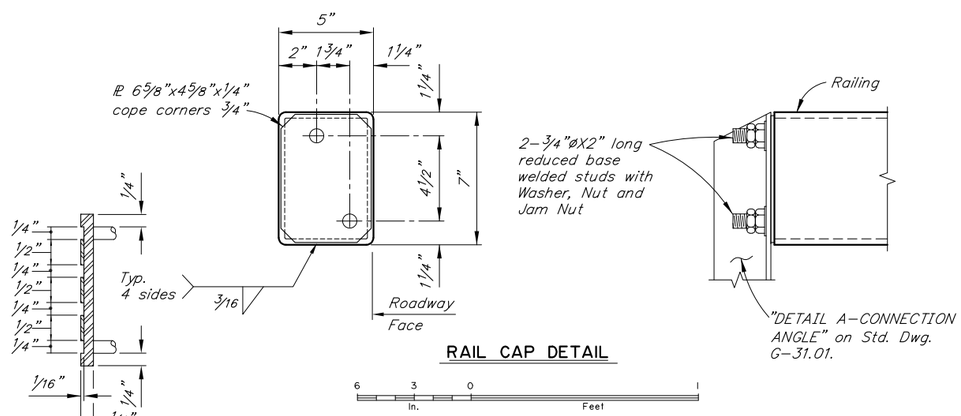

RAIL CAP DETAIL

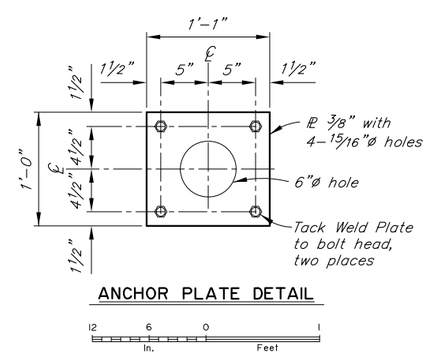

ANCHOR PLATE DETAIL

NOTES

1. Locate bridge number plates on right hand side of approaching traffic near each end as shown on General Layout Dwg. (2 total).
2. Furnish bridge number plates. Use "Century" type style lettering. Use studs and nuts that conform to UNS C65100 or C65500. Braze ¼"ø threaded rod to back of plate with nut – 4 required. Use tamper proof nuts.
3. Provide railing expansion joints at 50'-0" maximum intervals. Railing shall be continuous over 2 posts minimum. Railing expansion joints are required in rail panels that span bridge expansion joints.
4. Use grout with a minimum 24 hour f'c of 3000 psi.
5. See "FRAMING PLAN AND TYPICAL SECTION" Dwg. for rail post spacing.
6. Install bridge rail posts plumb.
7. See Std. Dwg. G-31.01 for Thrie Beam Transition.
8. Adjust reinforcing to accommodate curb taper.

DESIGNED BY: Elmer Marx	CHECKED: David McAdoo	STATE OF ALASKA **DEPARTMENT OF TRANSPORTATION AND PUBLIC FACILITIES** BRIDGE SECTION 3132 Channel Drive Juneau, Alaska 99801 907-465-2975	**INDIAN CREEK BRIDGE** SEWARD HIGHWAY **STEEL BRIDGE RAILING**
DRAWN BY: Sam Sollie	CHECKED: Elmer Marx		BRIDGE NO. 644
QUANTITIES BY: Elmer Marx	CHECKED: David McAdoo		DWG. NO. 16

R:\cad\644\644-1-STEEL BRIDGE RAILING Thu, Jan/31/19 07:13am

STATE	PROJECT DESIGNATION	YEAR	SHEET NO.	TOTAL SHEETS
ALASKA	0A31056/CFHWY00011	2019	N20	N29

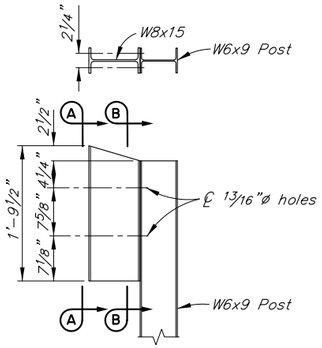

STEEL BLOCKOUT

See Note 2 for additional details

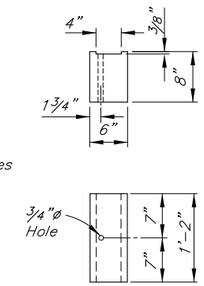

WOOD BLOCKOUT

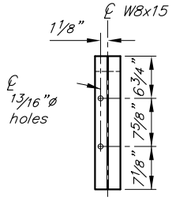

VIEW A-A

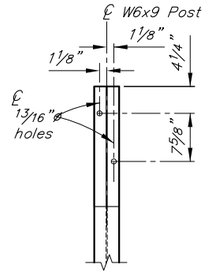

SECTION B-B

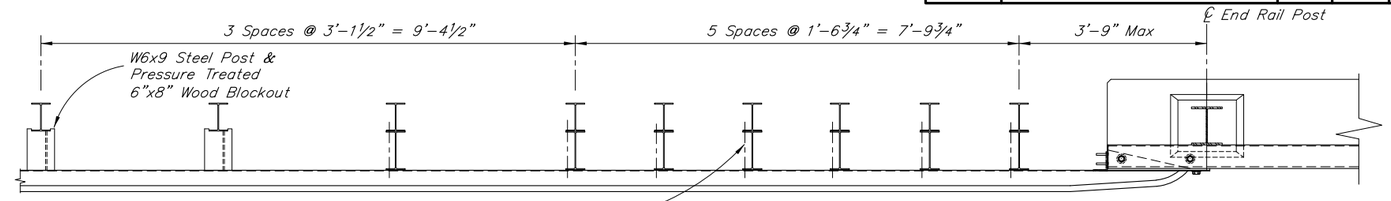

TRANSITION - PLAN

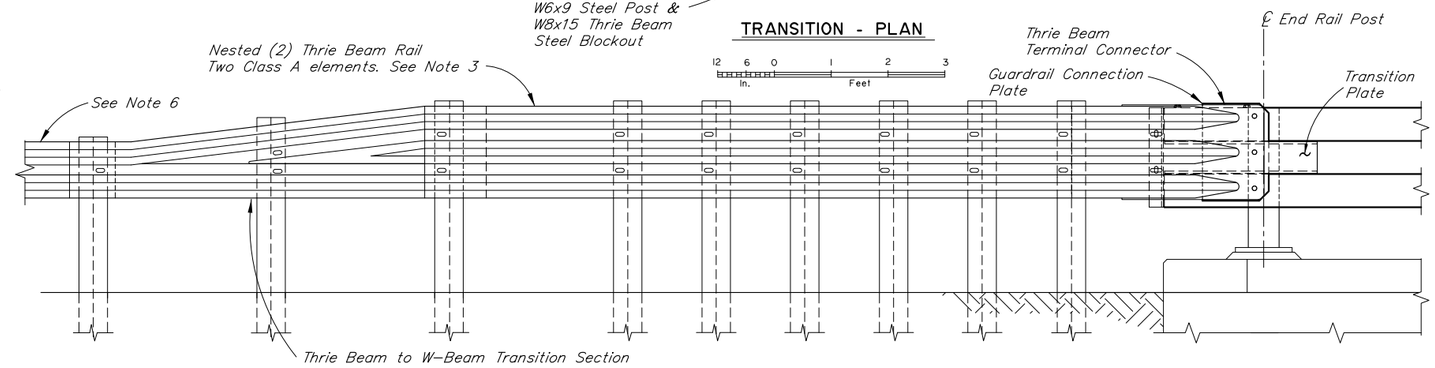

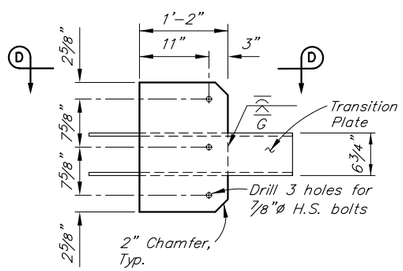

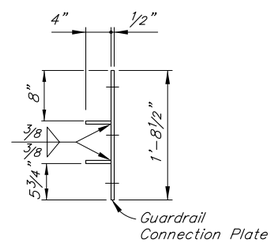

GUARDRAIL CONNECTION PLATE DETAILS

TBD

New crash-tested transition railing is under development and should be available prior to Final PSE

TRANSITION - ELEVATION

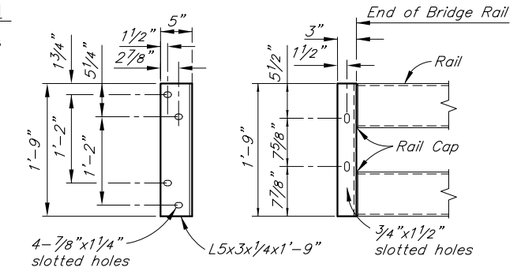

CONNECTION ANGLE A

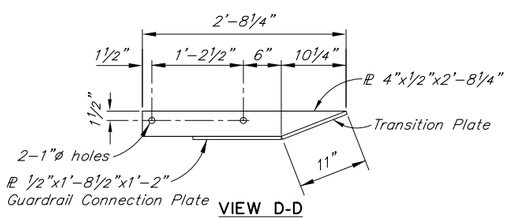

VIEW D-D

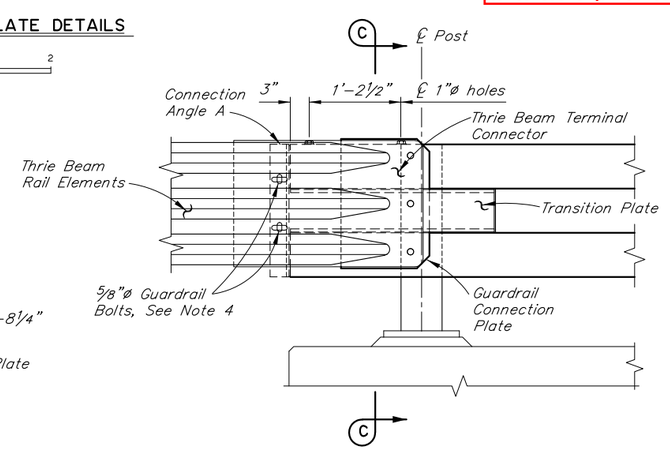

TRANSITION CONNECTION - ELEVATION

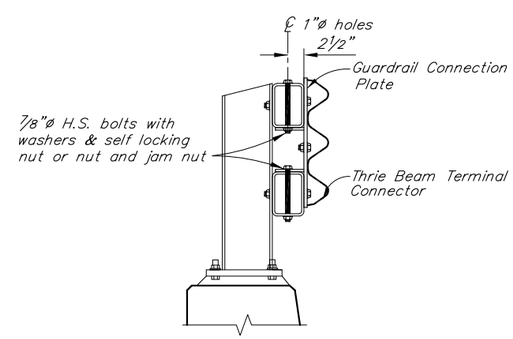

SECTION C-C

NOTES:

1. All guardrail and guardrail connection hardware to conform to AASHTO M 180. Use H.S. Bolts conforming to ASTM A325. All other steel conforms to ASTM A709 Grade 36.
2. Conform to G-00, G-04S and G-10 of the Standard Drawings for all guardrail details not shown. No backup plate is required.
3. Lap approach guardrail to prevent snags from oncoming traffic.
4. Provide 4½" horizontal slots in approach guardrail. Adjust guardrail bolts for sliding fit.
5. Match height of existing or new rail elements and end treatments.
6. Thrie Beam transition to follow roadway alignment.
7. Verify controlling field dimensions before ordering or fabricating any material.

DESIGNED BY: Elmer Marx	CHECKED: David McAdoo	STATE OF ALASKA DEPARTMENT OF TRANSPORTATION AND PUBLIC FACILITIES BRIDGE SECTION 3132 Channel Drive Juneau, Alaska 99801 907-465-2975	INDIAN CREEK BRIDGE SEWARD HIGHWAY THRIE BEAM TRANSITION RAIL
DRAWN BY: Sam Sollie	CHECKED: Elmer Marx		BRIDGE NO. 644
QUANTITIES BY: Elmer Marx	CHECKED: David McAdoo		DWG. NO. 17

R:\cad\644\644-1-TRANSITION Thu, Jan/31/19 07:13am

STATE	PROJECT DESIGNATION	YEAR	SHEET NO.	TOTAL SHEETS
ALASKA	0A31056/CFHWY00011	2019	N21	N29

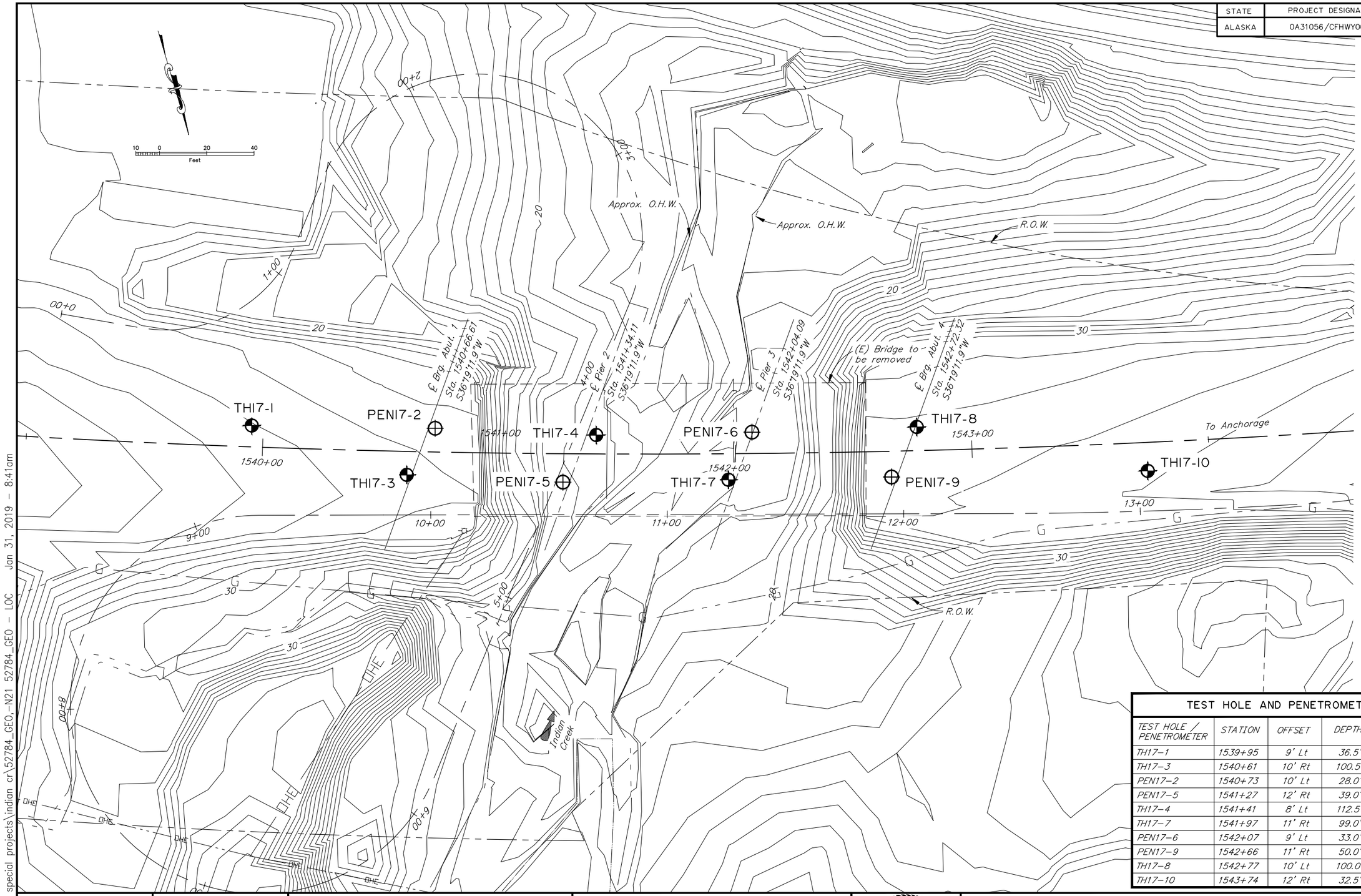

LEGEND

- TEST HOLE
- PENETROMETER

TEST HOLE AND PENETROMETER LOCATIONS

TEST HOLE / PENETROMETER	STATION	OFFSET	DEPTH	LOCATION
TH17–1	1539+95	9' Lt	36.5'	Approach 1
TH17–3	1540+61	10' Rt	100.5'	Abutment 1
PEN17–2	1540+73	10' Lt	28.0'	Abutment 1
PEN17–5	1541+27	12' Rt	39.0'	Pier 2
TH17–4	1541+41	8' Lt	112.5'	Pier 2
TH17–7	1541+97	11' Rt	99.0'	Pier 3
PEN17–6	1542+07	9' Lt	33.0'	Pier 3
PEN17–9	1542+66	11' Rt	50.0'	Abutment 4
TH17–8	1542+77	10' Lt	100.0'	Abutment 4
TH17–10	1543+74	12' Rt	32.5'	Approach 4

DESIGNED BY: D. Hemstreet	CHECKED: Engineer		
DRAWN BY: R. Angell	CHECKED: Engineer		
QUANTITIES BY: Engineer	CHECKED: Engineer		

STATE OF ALASKA
DEPARTMENT OF TRANSPORTATION AND PUBLIC FACILITIES
STATEWIDE MATERIALS

STATE OF ALASKA 49TH
David A. Hemstreet
No. CE 9800
REGISTERED PROFESSIONAL ENGINEER

INDIAN CREEK BRIDGE

SEWARD HIGHWAY MP 99 TO 105 IMPROVEMENTS

TEST HOLE & PENETROMETER LOCATIONS

BRIDGE NO. 0644
DWG. NO. 18

R:\Projects\drafting special projects\indian cr\52784_GEO,-N21 52784_GEO - LOC Jan 31, 2019 - 8:41am

STATE	PROJECT DESIGNATION	YEAR	SHEET NO.	TOTAL SHEETS
ALASKA	0A31056/CFHWY00011	2019	N22	N29

TYPICAL TEST HOLE LOG

DATE: Date begun – Date completed
STATION / OFFSET: XX+XX FEET RT or LT

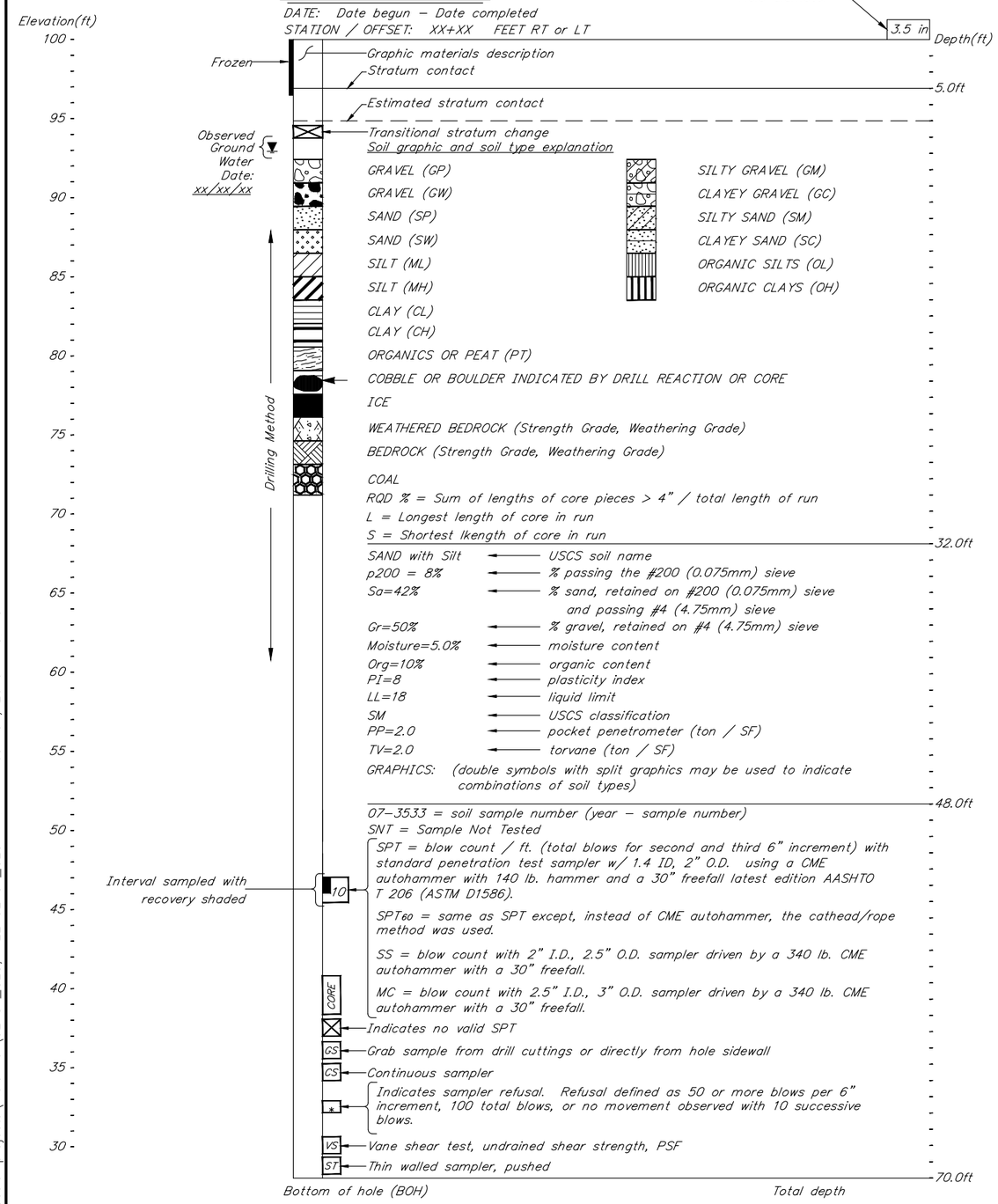

NOTES:

1) The test hole logs depicted graphically in these drawings are distillations of the original field logs, based on post–field investigation review and analysis. These drafted logs include changes made to field descriptions based upon laboratory test data, review and analysis. Detailed field observations of rock and soil sampled during the drilling program are not reproduced in the drafted logs.
2) Description of soils follows Alaska Geotechnical Procedures manual. Classification of soils follows Unified Soil Classification System (ASTM D2487).
3) The test hole logs from these sheets are an integral part of the Foundation Geology Report. See Construction Contract Bid Documents – invitation to bid/notice to bidders. Important information about the test hole logs and the foundation investigation is contained in the report. The test hole logs are not severable from and cannot be completely and correctly interpreted without reference to the Foundation Geology Report.

TYPICAL PENETROMETER TEST LOG

DATE: Date begun – Date completed
STATION / OFFSET: XX+XX / RT or LT (feet)

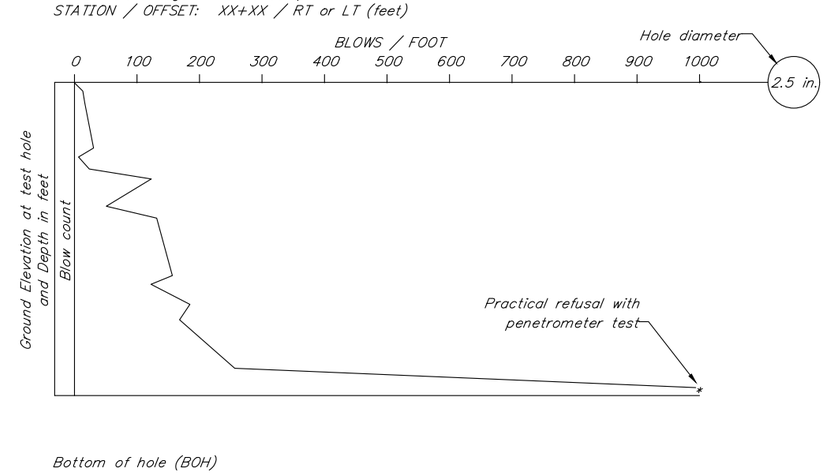

NOTES:
Penetrometer W/2.5" O.D., with a CME AUTOMATIC Hammer using a 340 lb. weight and a 30" freefall

DESIGNED BY: D.Hemstreet	CHECKED: Engineer		
DRAWN BY: R. Angell	CHECKED: Engineer		
QUANTITIES BY: Engineer	CHECKED: Engineer		

STATE OF ALASKA
DEPARTMENT OF TRANSPORTATION AND PUBLIC FACILITIES
STATEWIDE MATERIALS

STATE OF ALASKA 49TH — David A. Hemstreet No. CE 9800 — REGISTERED PROFESSIONAL ENGINEER

INDIAN CREEK BRIDGE

SEWARD HIGHWAY MP 99 to 105 IMPROVEMENTS

TEST HOLE & PENETROMETER LEGEND

BRIDGE NO. 0644
DWG. NO. 19

R:\Projects\drafting special projects\indian cr\52784_GEO,-N22 52784_GEO – TYP Jan 31, 2019 – 8:41am

STATE	PROJECT DESIGNATION	YEAR	SHEET NO.	TOTAL SHEETS
ALASKA	0A31056/CFHWY00011	2019	N23	N29

THI7-1

Date: 3/10/17
Station / Offset : 1539+95 / 9' Lt

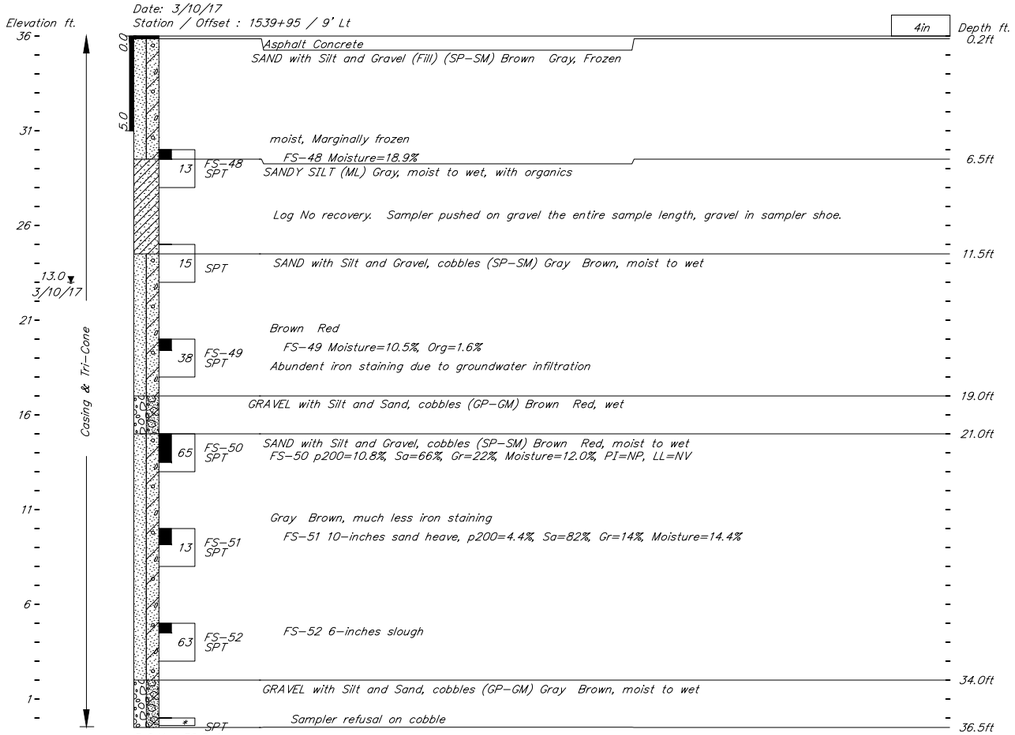

B.O.H. 36.5 ft.

Drilled on the road
140 lb hammer, CME Auto Hammer, For Sampler

PENI7-2

Date: 2/21/2017
Station / Offset: 1540+73 / 10' Lt

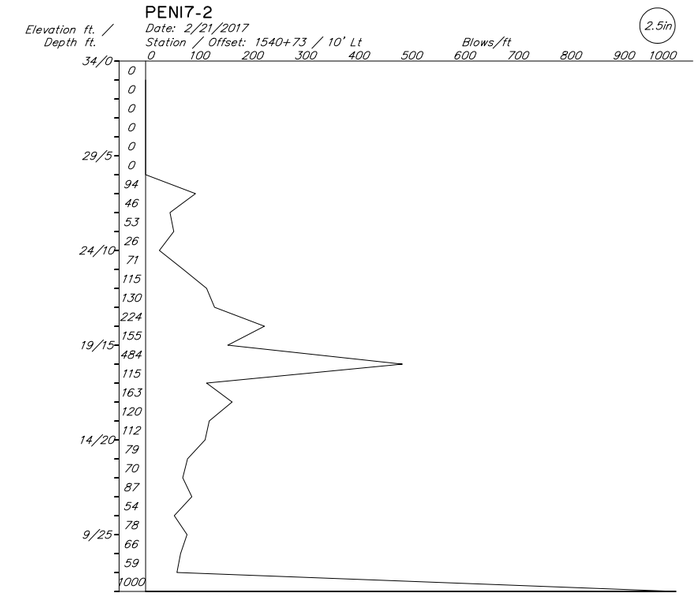

BOH: 28 ft
Notes: Located on the road
Hammer: CME Auto Hammer 340 lb hammer
Equipment: CME 75 Truck
Drilling Method: Penetrometer
Field Crew: R. Wagster and J Young
Geologist: T. Weiss

DESIGNED BY: D.Hemstreet	CHECKED: Engineer		
DRAWN BY: R. Angell	CHECKED: Engineer		
QUANTITIES BY: Engineer	CHECKED: Engineer		

STATE OF ALASKA
DEPARTMENT OF TRANSPORTATION AND PUBLIC FACILITIES
STATEWIDE MATERIALS

STATE OF ALASKA 49TH David A. Hemstreet No. CE 9800 REGISTERED PROFESSIONAL ENGINEER

INDIAN CREEK BRIDGE

SEWARD HIGHWAY MP 99 to 105 IMPROVEMENTS

TEST HOLE & PENETROMETER LOGS

BRIDGE NO. 0644
DWG. NO. 20

R:\Projects\drafting special projects\indian cr\52784_GEO,-N23 52784_GEO - TH-1&P-2 Jan 31, 2019 - 8:41am

STATE	PROJECT DESIGNATION	YEAR	SHEET NO.	TOTAL SHEETS
ALASKA	0A31056/CFHWY00011	2019	N24	N29

THI7-3

Date: 2/23/17 – 2/27/17
Station / Offset : 1540+61 / 10' Rt

Casing & Tri-Cone

Elevation ft.	Depth ft.	Description
35	0.0	Asphalt Concrete
	0.2ft	GRAVEL with Silt and Sand (Fill) (GP–GM) Gray, Frozen, Nbn
30	5.0	FS–1 SPT — moist, marginally frozen; non–frozen
7.5 ▼ 2/24/17	8.5ft	SILTY GRAVEL with Sand (GM) Gray Brown, moist, slightly organic
25		FS–2 (104) SPT — FS–2 sampler pushed gravel for 2nd interval, p200=15.5%, Sa=40%, Gr=44%, Moisture=8.2%, Org=1.6%
20	14.0ft	MC — GRAVEL with Silt and Sand, cobbles and boulders (GP–GM) Gray, moist; sampler on cobble or boulder, no recovery; variety of gravel types, Alluvium.
15 20.0 ▼ 2/23/17		FS–3 (50/3") MC — FS–3 sampler refusal on cobble
	22.0ft	SAND with Silt and Gravel (SP–SM) Brown, moist to wet; with interbedded gravel layers.
10		FS–4 (30) MC — FS–4 p200=9.1%, Sa=62%, Gr=29%, Moisture=9.6%, PI=NP, LL=NV
	27.0ft	SILTY SAND with Gravel (SM) Brown Gray, moist to wet
5		FS–5 (60) SPT — FS–5 p200=13.3%, Sa=59%, Gr=28%, Moisture=11.8%
		FS–6 sampler pushed gravel for 1st interval, p200=22.3%, Sa=56%, Gr=22%, Moisture=11.8%
0	34.5ft	FS–6 (99) SPT — SILTY SAND (SM) Brown Gray, moist to wet, trace to some gravel
–5		FS–7 (79) SPT — FS–7 p200=48.1%, Sa=49%, Gr=3%, Moisture=17.5%, Org=0.9%, PI=NP, LL=NV; with thin interbebbed silt layers
	43.0ft	SILTY SAND with Gravel (SM) Gray, moist to wet
–10		FS–8 (*) SPT — FS–8 p200=41.6%, Sa=42%, Gr=16%, Moisture=9.5%, PI=NP, LL=NV
	48.0ft	SILT with Sand (ML) Gray, moist, some gravel and slightly plastic
–15		FS–9 (125) SPT — FS–9 2–inches slough, p200=57.5%, Sa=29%, Gr=13%, Moisture=10.7%, PI=3, LL=18; PP = max. at 4.5 ton/ft.2, TV = 0.6 ton/cm2
–20	56.0ft	SILTY SAND with Gravel and cobbles (SM) Gray, moist, slightly plastic
–25		FS–10 (*) MC — FS–10 3–inches slough, p200=27.1%, Sa=39%, Gr=34%, Moisture=6.6%, PI=4, LL=18
–30	64.0ft	SAND with Silt and Gravel, cobbles (SP–SM) Brown Gray, moist; Glacial Moraine material
–35		FS–11 (61) MC — FS–11 p200=8.8%, Sa=59%, Gr=32%, Moisture=9.7%, PI=NP, LL=NV; with interbedded gravel layers

THI7-3 (Cont.)

Date: 2/23/17 – 2/27/17
Station / Offset : 1540+61 / 10' Rt

Casing & Tri-Cone

Elevation ft.	Depth ft.	Description
–40		FS–12 (*) MC — FS–12 sampler refusal on cobble, p200=8.8%, Sa=66%, Gr=35%, Moisture=8.7%; variety of gravel types, glacial moraine material
–45		
–50		
–55		FS–13 (73) MC — FS–13 3–inches slough, p200=5.2%, Sa=60%, Gr=35%, Moisture=8.5%, PI=NP, LL=NV
	94.0ft	GRAVEL with Silt and Sand and cobbles (GP–GM) Brown, moist, with interbedded sand layers
–60		
–65		FS–14 (90) MC — FS–14 4–inches slough, p200=8.1%, Sa=33%, Gr=59%, Moisture=5.9%
	100.5ft	B.O.H. 100.5 ft.

Drilled on the road
140 lb hammer, CME Auto Hammer, For Sampler

DESIGNED BY: D.Hemstreet	CHECKED: Engineer	STATE OF ALASKA DEPARTMENT OF TRANSPORTATION AND PUBLIC FACILITIES STATEWIDE MATERIALS	INDIAN CREEK BRIDGE
DRAWN BY: R. Angell	CHECKED: Engineer	STATE OF ALASKA 49TH David A. Hemstreet No. CE 9800 REGISTERED PROFESSIONAL ENGINEER	SEWARD HIGHWAY MP 99 to 105 IMPROVEMENTS
QUANTITIES BY: Engineer	CHECKED: Engineer		TEST HOLE & PENETROMETER LOGS

BRIDGE NO. 0644
DWG. NO. 21

R:\Projects\drafting special projects\indian cr\52784_GEO,-N24 52784_GEO – TH-3 Jan 31, 2019 – 8:41am

STATE	PROJECT DESIGNATION	YEAR	SHEET NO.	TOTAL SHEETS
ALASKA	0A31056/CFHWY00011	2019	N25	N29

THI7-4

Date: 3/4/17 – 3/6/17
Station / Offset : 1541+41 / 8' Lt

* Elevation: 33.50 ft. on bridge, 18.87 ft. under

4in

Elevation ft.	Depth ft.	Description
0	0.5ft	Asphalt Concrete Bridge Deck
2.0 ▼ 3/6/15		Air Air between bridge deck and ground groundwater rose up the casing pipe overnight.
5		
		Air between bridge deck and ground
10		
15 (16.50)	15.0ft	SAND with Silt and Gravel, Cobbles (SP–SM) Brown, Frozen, Nbe
17.5 ▼ 3/4/17		wet, non frozen with organics
20		FS–27 SPT (47)
	22.5ft	GRAVEL with Silt and Sand, Cobbles (GP–GM) Brown Gray, moist to wet
25		FS–28 SPT (90) — FS–28 Sampler pushed on gravel 1st interval, p200=11.4%, Sa=44%, Gr=45%, Moisture=9.7%
	27.5ft	SILTY SAND (SM) Gray Brown, moist to wet, with thin interbedded silt layers
30		FS–29 SPT (54) — FS–29 p200=32.8%, Sa=66%, Gr=1%, Moisture=19.9%, Org=1.1%, PI=NP, LL=NV
		material deposited in slow moving water or lake
	33.0ft	SILTY SAND with Gravel (SM) Gray, moist
35		FS–30 SPT (*) — FS–30 p200=48.1%, Sa=37%, Gr=15%, Moisture=9.9%, PI=NP, LL=NV
	37.0ft	SILT with Sand (ML) Gray, moist, trace gravel
40		FS–31 SPT (*) — FS–31 Moisture=12.4%, PI=NP, LL=NV
	43.5ft	SAND with Silt and Gravel , Cobbles (SP–SM) Brown Gray, moist
45		FS–32 MC (*) — FS–32 Moisture=7.4%
	46.5ft	GRAVEL with Silt and Sand, Cobbles (GP–GM) Brown Gray, moist to wet, 2nd groundwater table. It is confined and under pressure.
50		FS–33 MC (*) — FS–33 sampler refusal on cobble, Moisture=7.2%
55		FS–34 MC (*) — FS–34 sampler refusal on cobble, p200=11.6%, Sa=38%, Gr=50%, Moisture=7.5%
		with interbedded sand layers
60		MC (*) — sampler refusal on cobble
	62.0ft	SAND with Silt and Gravel , Cobbles (SP–SM) Brown Gray, moist, with interbedded gravel layers
65		FS–35 MC (75) — FS–35 p200=8.1%, Sa=51%, Gr=41%, Moisture=7.9%, PI=NP, LL=NV
70		

THI7-4 (Cont.)

Date: 3/4/17 – 3/6/17
Station / Offset : 1541+41 / 8' Lt

4in

Elevation ft.	Depth ft.	Description
70	71.0ft	GRAVEL with Silt and Sand, Cobbles (GP–GM) Brown Gray, moist, with interbedded sand layers
75		FS–36 MC (107) — FS–36 sampler pushed gravel for 2nd interval
80		similar and consistent material
85		FS–37 MC (78/6") — FS–37 sampler refusal on cobble, Moisture=6.7%
	89.0ft	SAND with Silt and Gravel , Cobbles (SP–SM) Brown Gray, moist, with interbedded gravel layers
90		
95		FS–38 MC (112) — FS–38 sampler pushed cobble 2nd interval, p200=8.7%, Sa=56%, Gr=35%, Moisture=9.1%
	98.0ft	GRAVEL with Silt and Sand, Cobbles (GP–GM) Brown Gray, moist, with interbedded sand layers
100		Gray, increased gravel and larger sized, most gravel appear the same type
105		FS–39 MC (75) — FS–39 sampler push on cobble for 1st interval, p200=6.3%, Sa=35%, Gr=59%, Moisture=7.0%
110	110.0ft	WEATHERED BEDROCK Gray, no sample, but drill reaction and cuttings appear to be bedrock.
	112.5ft	B.O.H. 112.5 ft.

Drilled on the existing bridge deck
140 lb hammer, CME Auto Hammer, For Sampler

R:\Projects\drafting special projects\indian cr\52784_GEO_N25 52784_GEO – TH–4 Jan 31, 2019 – 8:41am

DESIGNED BY: D.Hemstreet	CHECKED: Engineer		
DRAWN BY: R. Angell	CHECKED: Engineer		
QUANTITIES BY: Engineer	CHECKED: Engineer		

STATE OF ALASKA
DEPARTMENT OF TRANSPORTATION AND PUBLIC FACILITIES
STATEWIDE MATERIALS

STATE OF ALASKA 49TH — David A. Hemstreet No. CE 9800 — REGISTERED PROFESSIONAL ENGINEER

INDIAN CREEK BRIDGE

SEWARD HIGHWAY MP 99 to 105 IMPROVEMENTS

TEST HOLE & PENETROMETER LOGS

BRIDGE NO. 0644
DWG. NO. 22

STATE	PROJECT DESIGNATION	YEAR	SHEET NO.	TOTAL SHEETS
ALASKA	0A31056/CFHWY00011	2019	N26	N29

PENI7-5

Date: 2/22/2017
Station / Offset: 1541+27 / 12' Rt

* Elevation: 34.20 ft. on bridge, 19.68 ft. under.

2.5in

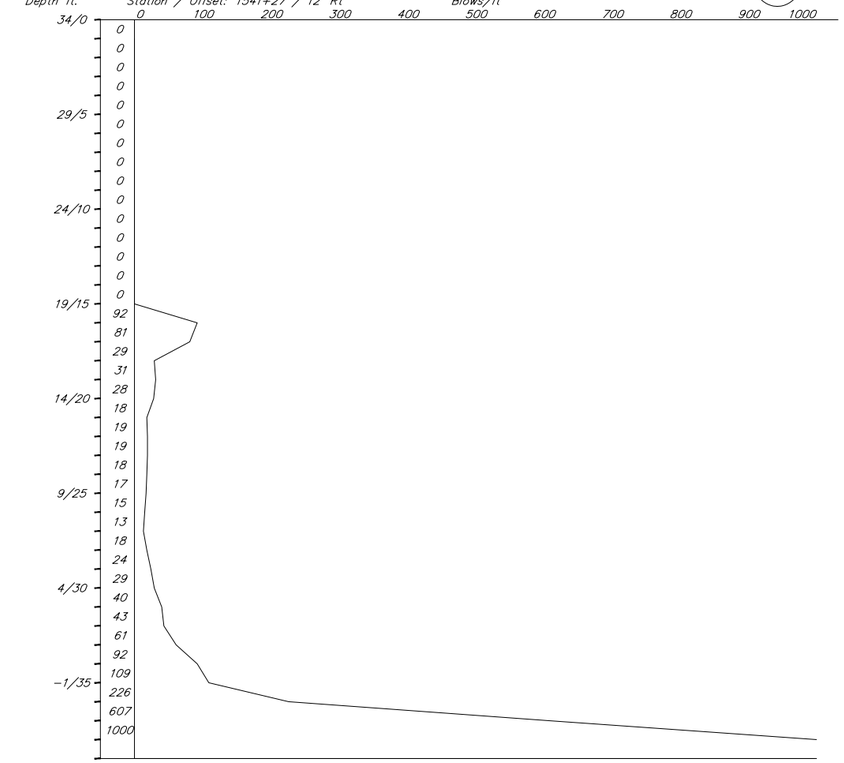

BOH: 39 ft
Notes: Located on the existing bridge deck
Hammer: CME Auto Hammer 340 lb hammer
Equipment: CME 75 Truck
Drilling Method: Penetrometer
Field Crew: R. Wagster and J Young
Geologist: T. Weiss

PENI7-6

Date: 2/22/2017
Station / Offset: 1542+07 / 9' Lt

* Elevation: 32.91 ft. on bridge, 16.92 ft. under

2.5in

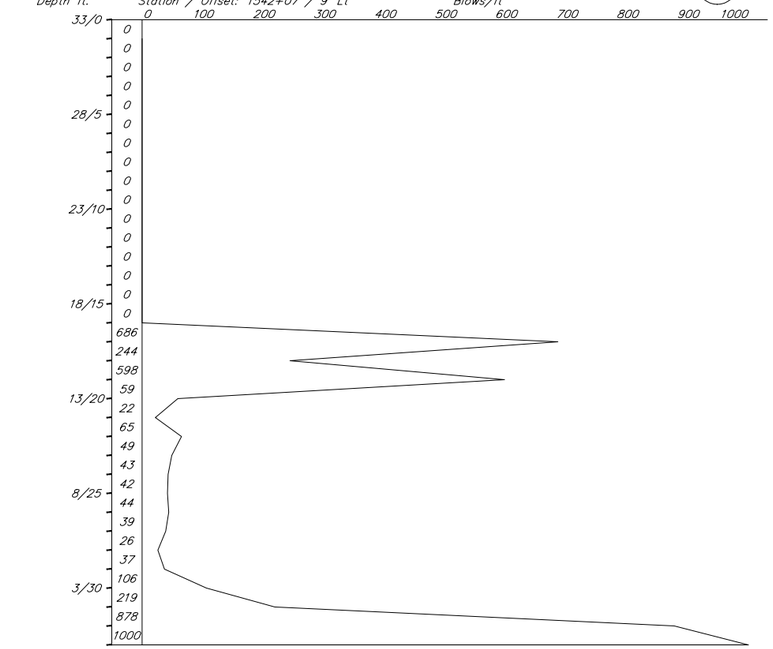

BOH: 33 ft
Notes: Located on the existing bridge deck
Hammer: CME Auto Hammer 340 lb hammer
Equipment: CME 75 Truck
Drilling Method: Penetrometer
Field Crew: R. Wagster and J Young
Geologist: T. Weiss

R:\Projects\drafting special projects\indian cr\52784_GEO,-N26 52784_GEO - P-5&P-6 Jan 31, 2019 - 8:41am

DESIGNED BY: D.Hemstreet	CHECKED: Engineer		
DRAWN BY: R. Angell	CHECKED: Engineer		
QUANTITIES BY: Engineer	CHECKED: Engineer		

STATE OF ALASKA
DEPARTMENT OF TRANSPORTATION AND PUBLIC FACILITIES
STATEWIDE MATERIALS

STATE OF ALASKA 49TH
David A. Hemstreet
No. CE 9800
REGISTERED PROFESSIONAL ENGINEER

INDIAN CREEK BRIDGE

SEWARD HIGHWAY MP 99 to 105 IMPROVEMENTS

TEST HOLE & PENETROMETER LEGEND

BRIDGE NO. 0644
DWG. NO. 23

STATE	PROJECT DESIGNATION	YEAR	SHEET NO.	TOTAL SHEETS
ALASKA	0A31056/CFHWY00011	2019	N27	N29

THI7-7

Date: 3/1/17 – 3/3/17
Station / Offset : 1541+97 / 11' Lt

* Elevation: 33.67 ft. on bridge, 16.5 ft. under

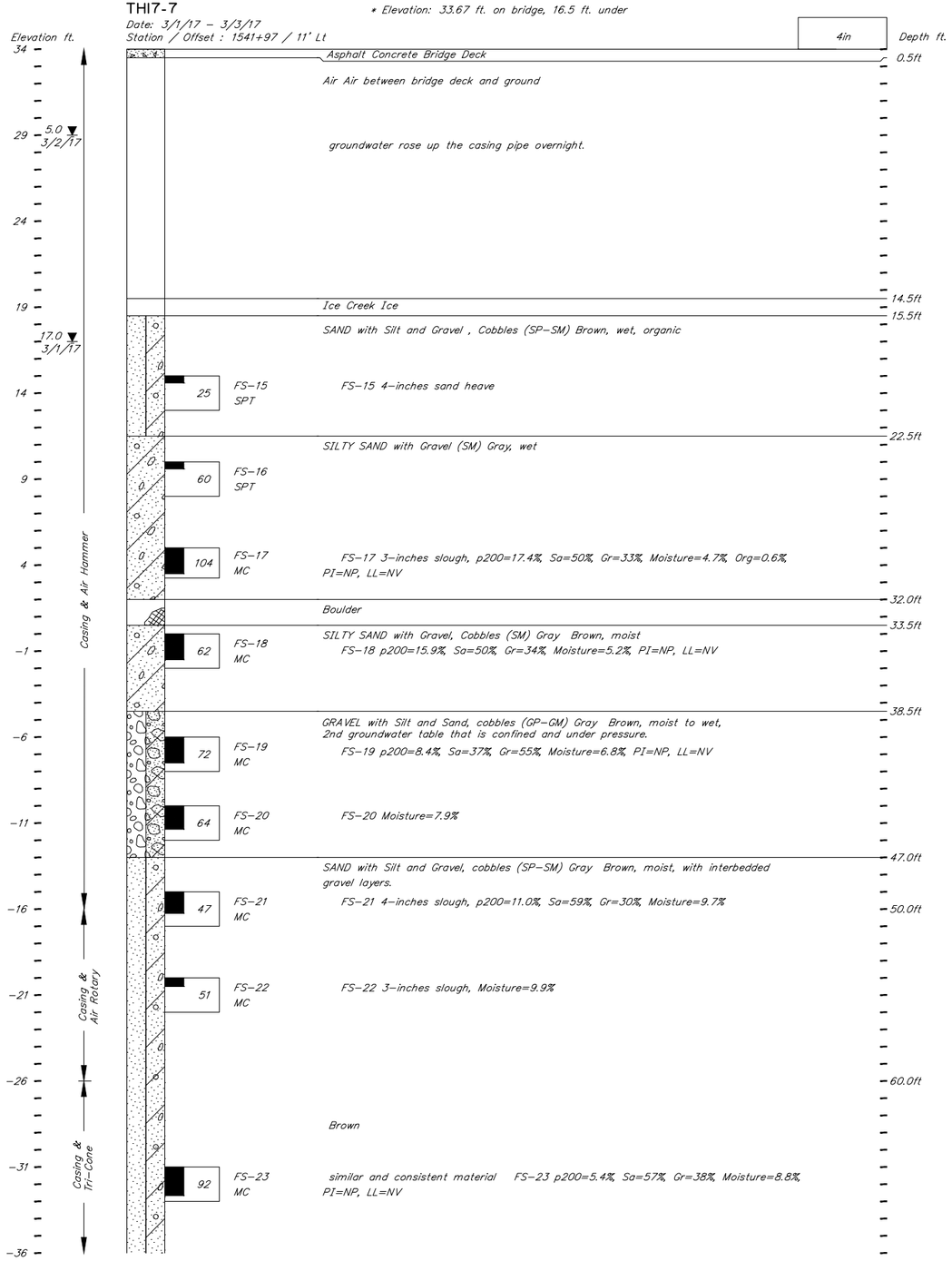

THI7-7 (Cont.)

Date: 3/1/17 – 3/3/17
Station / Offset : 1541+97 / 11' Lt

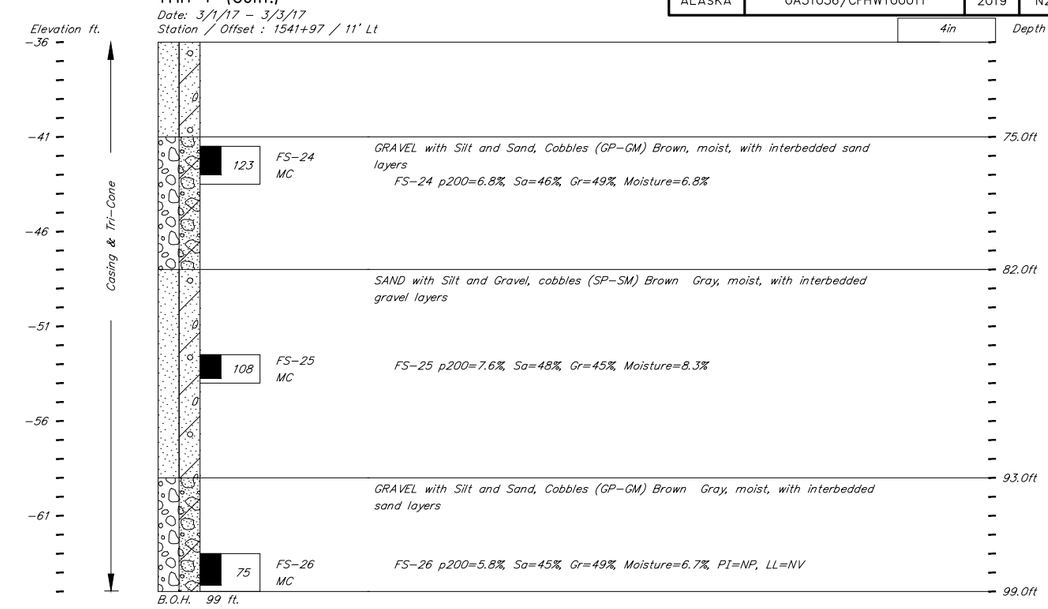

Drilled on the existing bridge deck
140 lb hammer, CME Auto Hammer, For Sampler

DESIGNED BY: D.Hemstreet	CHECKED: Engineer		
DRAWN BY: R. Angell	CHECKED: Engineer		
QUANTITIES BY: Engineer	CHECKED: Engineer		

STATE OF ALASKA
DEPARTMENT OF TRANSPORTATION AND PUBLIC FACILITIES
STATEWIDE MATERIALS

STATE OF ALASKA 49TH David A. Hemstreet No. CE 9800 REGISTERED PROFESSIONAL ENGINEER

INDIAN CREEK BRIDGE

SEWARD HIGHWAY MP 99 to 105 IMPROVEMENTS

TEST HOLE & PENETROMETER LOGS

BRIDGE NO. 0644
DWG. NO. 24

R:\Projects\drafting special projects\indian cr\52784_GEO_N27 52784_GEO – TH–7 Jan 31, 2019 – 8:41am

STATE	PROJECT DESIGNATION	YEAR	SHEET NO.	TOTAL SHEETS
ALASKA	0A31056/CFHWY00011	2019	N28	N29

THI7-8

Date: 3/7/17 – 3/10/17
Station / Offset : 1542+77 / 10' Lt

4in

Elevation ft. | Depth ft.

33 — 0.0 — Asphalt Concrete — 0.2ft

2.0 3/10/17 — SAND with Silt and Gravel (Fill) (SP–SM) Gray Brown, Frozen, Nbn

28 — 6.0 — moist, Marginally frozen to 7–feet — 7.0ft

SILTY SAND with Gravel (SM) Brown, moist to wet, organic — 8.5ft

23 — 37 FS–40 SPT — SAND with Silt and Gravel (SP–SM) Brown Gray, moist to wet FS–40 p200=11.7%, Sa=55%, Gr=33%, Moisture=8.8%

GRAVEL with Silt and Sand (GP–GM) Gray Brown, moist to wet — 11.0ft

13.0ft

18 — 34 FS–41 SPT — SAND with Silt and Gravel (SP–SM) Brown Gray, moist to wet, slightly organic

17.0 3/7/17 — GRAVEL with Silt and Sand, cobbles (GP–GM) Brown Gray, wet — 17.0ft

13 — 44 SPT — sampler pushed cobble for 1st interval

70/3" SPT — sampler refusal on cobble

8 — 70/2" MC — sampler refusal on cobble

3 — Boulder Gray — 31.0ft

GRAVEL with Silt and Sand, cobbles (GP–GM) Brown Gray, moist to wet — 32.5ft

80/3" MC — Sampler refusal on cobble

–2 — Boulder Gray — 37.0ft

GRAVEL with Silt and Sand, cobbles (GP–GM) Gray Brown, moist to wet — 39.0ft

–7 — Boulder Gray — 41.5ft

43.0ft

–12 — 95 FS–42 MC — SILTY SAND with Gravel (SM) Brown Gray, moist to wet FS–42 p200=12.6%, Sa=51%, Gr=36%, Moisture=8.4%

48.0ft

–17 — 142 FS–43 MC — SAND with Silt and Gravel, cobbles (SP–SM) Brown Red, with iron staining FS–43 p200=8.5%, Sa=50%, Gr=41%, Moisture=8.6%, PI=NP, LL=NV

–22 — similar and consistent material

–27 — 113 FS–44 MC — FS–44 sampler pushed on cobble for 3rd interval

–32

–37 — 77 FS–45 MC — FS–45 p200=6.0%, Sa=58%, Gr=36%, Moisture=8.9%, PI=NP, LL=NV

Casing & Tri–Cone

THI7-8 (Cont.)

Date: 3/7/17 – 3/10/17
Station / Offset : 1542+77 / 10' Lt

4in

Elevation ft. | Depth ft.

–42 — 61 FS–46 MC — FS–46 4–inches sand heave, p200=5.3%, Sa=53%, Gr=42%, Moisture=8.7%, PI=NP, LL=NV

–47 — GRAVEL with Silt and Sand, cobbles (GP–GM) Brown Gray, moist to wet — 84.0ft

–52 — 90 FS–47 MC — FS–47 4–inches slough, p200=4.7%, Sa=47%, Gr=48%, Moisture=8.0%

–57 — casing shoe collasped. Drilled open hole to 100–feet and logged drill cuttings.

–62 — similar material

–72 — no sample — 100.0ft

B.O.H. 100 ft.

Casing & Tri–Cone

Drilled on the road
140 lb hammer, CME Auto Hammer, For Sampler

DESIGNED BY: D.Hemstreet	CHECKED: Engineer	STATE OF ALASKA DEPARTMENT OF TRANSPORTATION AND PUBLIC FACILITIES STATEWIDE MATERIALS	INDIAN CREEK BRIDGE SEWARD HIGHWAY MP 99 to 105 IMPROVEMENTS TEST HOLE & PENETROMETER LOGS
DRAWN BY: R. Angell	CHECKED: Engineer		BRIDGE NO. 0644
QUANTITIES BY: Engineer	CHECKED: Engineer		DWG. NO. 25

STATE OF ALASKA 49TH — David A. Hemstreet No. CE 9800 — REGISTERED PROFESSIONAL ENGINEER

R:\Projects\drafting special projects\indian cr\52784_GEO,-N28 52784_GEO – TH–8 Jan 31, 2019 – 8:41am

STATE	PROJECT DESIGNATION	YEAR	SHEET NO.	TOTAL SHEETS
ALASKA	0A31056/CFHWY00011	2019	N29	N29

PENI7-9

Date: 2/21/2017
Station / Offset: 1542+66 / 11' Rt

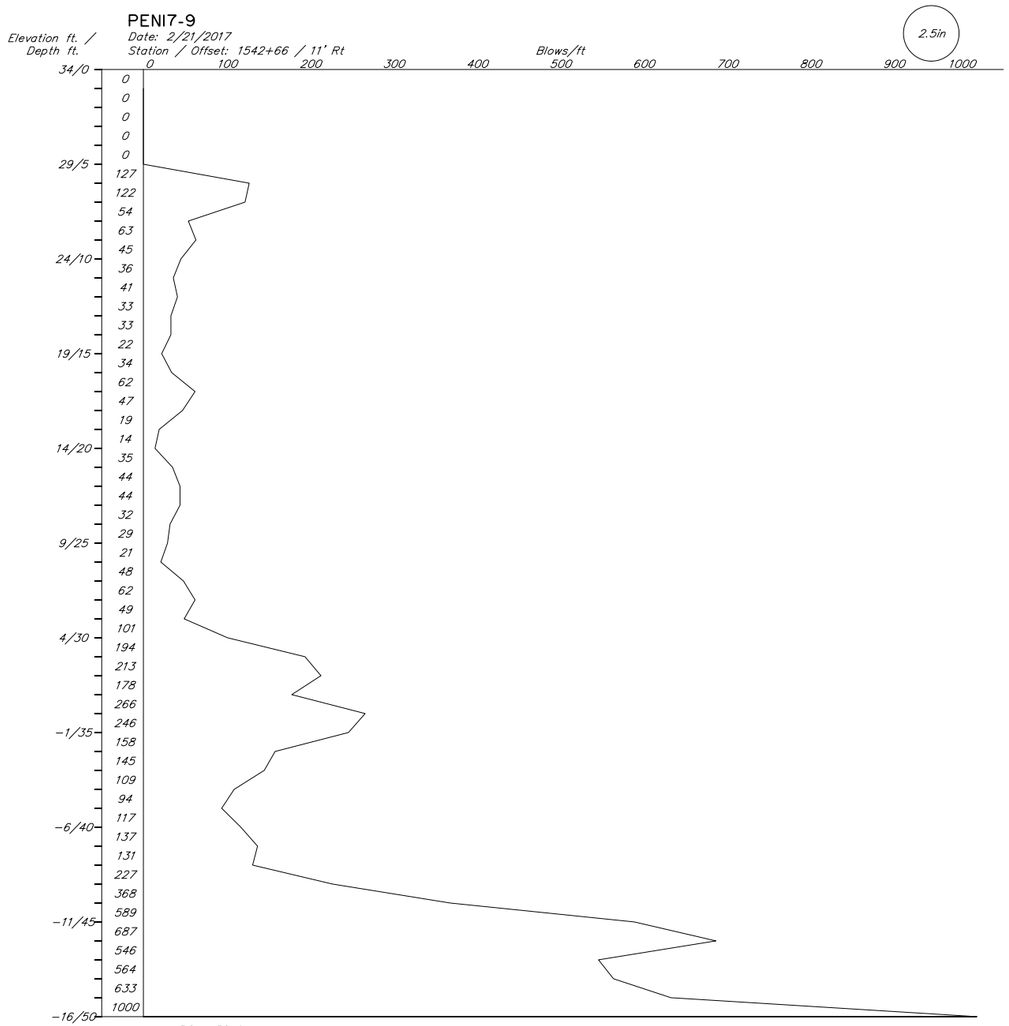

BOH: 50 ft
Notes: Located on the road
Hammer: CME Auto Hammer 340 lb hammer
Equipment: CME 75 Truck
Drilling Method: Penetrometer

Field Crew: R. Wagster and J Young
Geologist: T. Weiss

THI7-10

Date: 3/11/17
Station / Offset : 1543+74 / 12' Rt

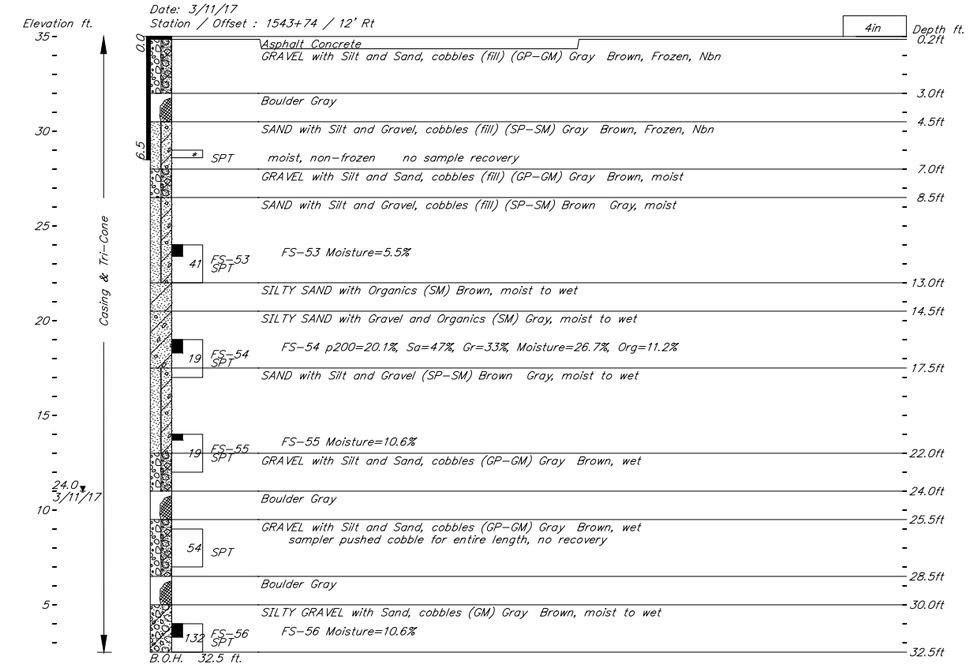

Drilled on the road
140 lb hammer, CME Auto Hammer, For Sampler

DESIGNED BY: D.Hemstreet	CHECKED: Engineer	STATE OF ALASKA DEPARTMENT OF TRANSPORTATION AND PUBLIC FACILITIES STATEWIDE MATERIALS	INDIAN CREEK BRIDGE SEWARD HIGHWAY MP 99 to 105 IMPROVEMENTS TEST HOLE & PENETROMETER LOGS
DRAWN BY: R. Angell	CHECKED: Engineer		BRIDGE NO. 0644
QUANTITIES BY: Engineer	CHECKED: Engineer		DWG. NO. 26

STATE OF ALASKA 49TH David A. Hemstreet No. CE 9800 REGISTERED PROFESSIONAL ENGINEER

R:\Projects\drafting special projects\Indian cr\52784_GEO,-N29 52784_GEO - P-9&TH-10 Jan 31, 2019 - 8:41am